ALC CATALOG
Revision 0

DYNAMCO

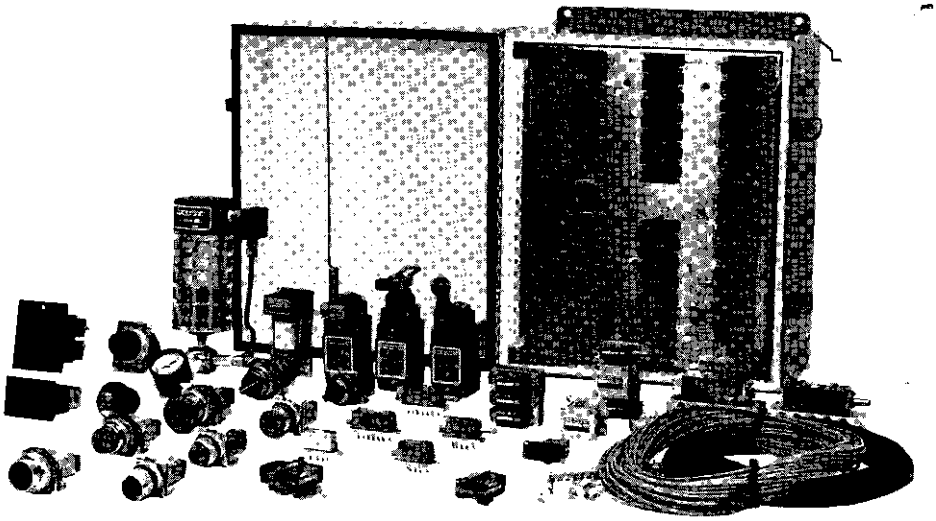

DYNAMCO AIR LOGIC

CONTROL COMPONENTS

DYNAMCO LP • 410 Industrial Blvd. • McKinney, Texas 75069 USA
Orders, Pricing: 972-548-9961 • Technical Help: 972-548-9963
Fax: 972-548-9966 • E-mail: sales@dynamco.com • www.dynamco.com

LOGIC COMPONENTS BULLETIN 300

RELAY VALVES
Detented Relays
LDA* 4 way, 5 port
MDA* Multi-flow-path
Free Floating Spool
LSA* 4 way, 5 port
Spring Return (25 psig)
LSH* 4 way, 5 port
MSH* Multi-flow-path
Spring Return (8 psig)
LSF* 4 way, 5 port
MSF* Multi-flow-path

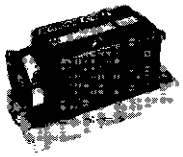

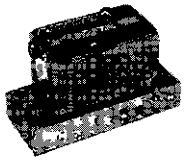

SHUTTLE VALVES
Dual Shuttles
OR*

*0=Without Base
1=1/16 Barb, Bot. Ports
2=1/16 Barb, Side Ports
4=10-32 UNF, Bot. Ports**
5=10-32 UNF, Side Ports**

FLOW CONTROLS
Panel Mounted
FCP3
Base Mounted
FC*

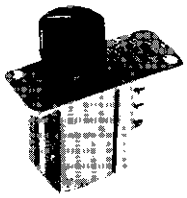

VOLUME CHAMBERS
VC1 Std. Volume
VC2 Small Volume

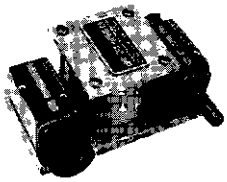

TIME DELAYS
Timing Relays
TR5 Spring Retn. Relay, Std. Vol.
TR7 Detented Relay, Std. Vol.

**Not available for multi-flow-path relays

ENCLOSURES

CONTROL CABINETS

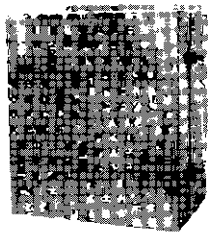

CC12 - 26 Station
CC13 - 47 Station
CC14 - 70 Station
CC16 - 140 Station
CC18 - 280 Station

See Bulletin 400 for pushbutton and universal chassis enclosures.

LIMIT VALVES BULLETIN 200

Pushbutton
HDL33 Top Adjustable
HDL35 Side Adjustable

HEAVY DUTY LIMIT VALVES

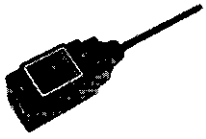

Wobble
HDL42 Top Spring
HDL43 Top Nylon Rod
HDL44 Top Steel Wire

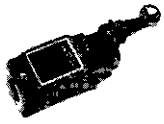

Rotary Head W/O Operator
HDL28 Side Narrow Diff. 5°
HDL30 Side Spring Return

Pushroller
HDL37 Top .75 Dia

Lever Operators
301-1 Steel
301-2 Nylon
301-3 Adj. Nylon
301-4 Adj. Steel
301-5 Rod
301-6 Wire
301-7 Spring Rod

MINIATURE LIMIT VALVES

SL111* Steel Roller Lever
SL121* Nylon Roller Lever
SL131* One Way Roller Lever
SL141* Flat Lever Operator
SL151* Mech. Stem Operator

*0=Without Base
1=1/16 Barb Base
2=10-32 UNF Base

PROGRAM-AIR™

Introducing PROGRAM-AIR™, the all new programmable pneumatic control component from DYNAMCO Inc. PROGRAM-AIR™, patent pending, combines precision air control devices to accomplish multifunction logic relationships within a single unit. PROGRAM-AIR™ simplifies circuit design by 50% and reduces trouble-shooting cost by 75% due to its built-in self-interrogation system which pin-points and indicates any machine failures automatically. PROGRAM-AIR™ units can be used individually or combined in series or parallel combinations to satisfy the simplest or most complex sequence control requirement.

MANUALS BULLETIN 100

PUSHBUTTONS

	Operator	Valve	Base
PB4110	Black Flush	Spring	1/16
PB4130	Black Flush	Detent	1/16
PB5310	Red Extended	Spring	1/16
PB5330	Red Extended	Detent	1/16
PB6340	Red Mushroom	Detent	10-32

Additional selections of operator colors, and spring returned or detented single valve or dual valve manual operators are described in detail in Bulletin 100.

ROTARY SELECTORS

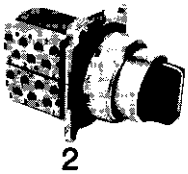

	Operator	Valves	Base
RS1110	2 Position	1	1/16
RS1120	2 Position	1	10-32
RS3311	3 Position	2	1/16
RS5311	3 Position (Spr. Retn. to Center)	2	1/16

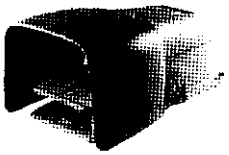

FOOT VALVES

	Treadle	Valve	Base
FV201	Guarded	Spring	1/16
FV202	Guarded	Spring	10-32
FV203	Guarded	Detent	1/16
FV204	Guarded	Detent	10-32

LEGEND PLATES

PB11 1 Line Inscription
PB12 2 Line Inscription
PB13 3 Line Inscription

DISPLAYS BULLETIN 900

COUNTERS
1383-1 Totalizing (Man/Air Reset)
1384-1 Predetermining

VISUAL INDICATORS
V2BA Black/Amber
V2BG Black/Green
V2BR Black/Red
V2RG Red/Green
V2GR Green/Red

AUDIBLE ALARM
1452-2 Audible Alarm

UNIVERSAL CHASSIS

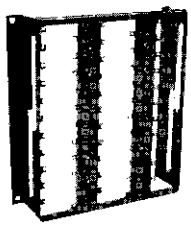

1278-1 - 12 Station
1279-1 - 22 Station
1280-1 - 33 Station
1281-1 - 51 Station
1282-1 - 76 Station

BULLETIN 400

TUBING - FITTINGS

BULLETIN 500

CONNECTORS
Tube to Male Thread
210-1 1/16 Barb X 1/8 NPT
211-1 1/16 Barb X 10-32 UNF
211-2 1/8 Barb X 10-32 UNF
521-1 1/8 Barb X 1/8 NPT
521-2 1/8 Barb X 1/16 NPT
Tube to Female Thread
210-2 1/16 Barb X 1/8 NPT
522-1 1/8 Barb X 1/8 NPT
Tube to Tube (Union)
391-2 1/16 Barb
520-1 1/8 Barb
Female Thd. to Female Thd.
1046-1 10-32 UNF

CROSS
1241-1 1/16 Barb - Tube
1298-1 10-32 UNF - Female Thd.

CAPS-PLUGS
380-2 1/16 Barb Cap
468-2 10-32 UNF Plug
506-5 1/8 NPT Plug

ELBOWS
Tube to Male Thread
524-1 1/8 Barb X 1/8 NPT
524-2 1/16 Barb X 1/8 NPT
1292-1 1/16 Barb X 10-32 UNF
1293-1 1/8 Barb X 10-32 UNF
Tube to Female Thread
526-1 1/16 Barb X 1/8 NPT
526-3 1/8 Barb X 1/8 NPT
Tube to Tube
523-1 1/8 Barb X 1/8 Barb
Female Thd. to Male Thd.
528-1 10-32 UNF X 1/8 NPT
1291-1 10-32 UNF X 10-32 UNF

TERMINALS
371-5 1/16 Barb - 15 Conn.
1200-1 10-32 UNF - 11 Conn.
1217-1 10-32 UNF - Panel Mt.

MANIFOLDS
205-1 1/16 Barb - 15 Outlet
205-4 1/16 Barb - 5 Outlet
1270-1 10-32 UNF - 5 Outlet

TEES
Tube to Tube to Tube
209-1 1/16 X 1/16 X 1/16
209-4 1/8 X 1/16 X 1/8
209-6 1/16 X 1/8 X 1/8
525-1 1/8 X 1/8 X 1/8
Female Thread Tee
1047-1 10-32 X 10-32 X 10-32
Female to Male to Female Thd.
1294-1 10-32 X 10-32 X 10-32
Tube to Male Thd. to Tube
1295-1 1/16 X 10-32 X 1/16
1296-1 1/8 X 10-32 X 1/8

TUBING POLYURETHANE
148-* 1/16 ID X 1/8 OD
149-* 1/8 ID X 1/4 OD
150-3 1/16 ID X 1/8 OD
150-4 1/8 ID X 1/4 OD
*Color identification

BULLETIN 1000

SC20100

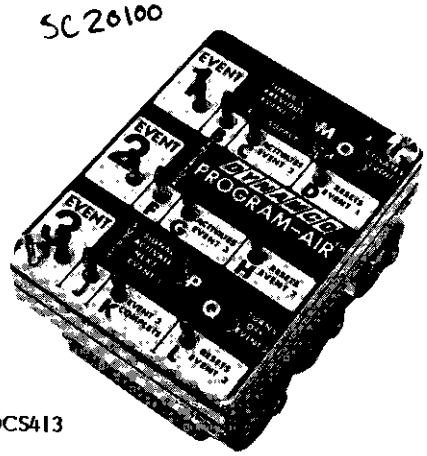

DCS413

POWER SUPPLY

BULLETIN 600

REGULATORS

R11 - 100 psig
R13 - 10 psig

PRESSURE GAGES

G11 - 0-100 psig
G13 - 0-30 psig

SECONDARY FILTER

FSO Without Mounting Plate
FS1 W/Panel Mounting Plate

PRIMARY FILTER MINIATURE

1203-2 In-line 1/4 NPT
1203-7 Panel Mount 10-32 UNF

PRIMARY FILTER

Manual Drain
FP3 Poly Bowl W/Guard

Power Pulse Drain Valve
FP31 Poly Bowl W/Guard

Power Pulse Drain System
FP32 Poly Bowl W/Guard

JET SENSING

BULLETIN 700

AMPLIFIER VALVES
Spring Return
LUF*
Detented
LUD*

VARIABLE ORIFICES
Panel Mounted
VOP3
Base Mounted
VO*

* 0=Without Base
1=1/16 Barb, Bot. Ports
2=1/16 Barb, Side Ports
4=10-32 UNF, Bot. Ports
5=10-32 UNF, Side Ports

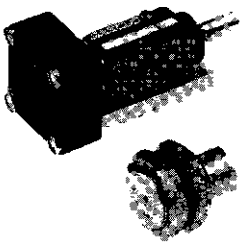

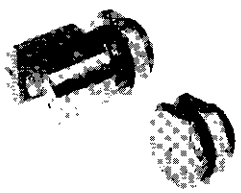

SENSORS
Proximity (Cone Jet)
1051-3
Interruptable Jet
2200-1
Emitter Jet
2201-1
Whisker Valve
2203-1
Sensor Mounting Bracket
2202-1
Needle Reader Jet
1456-2
Touch Sensor
2204-1

INTERFACES

PRESSURE ACTUATED VALVES
1159-4 1-115 psig
1160-1 135-1000 psig
1160-2 400-3000 psig

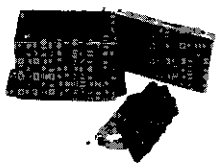

PRESSURE ACTUATED SWITCHES
Up to 5 pressure actuated NO/NC switches are packaged in a 4" x 4" x 6" JIC enclosure 1276-*
* number of switches

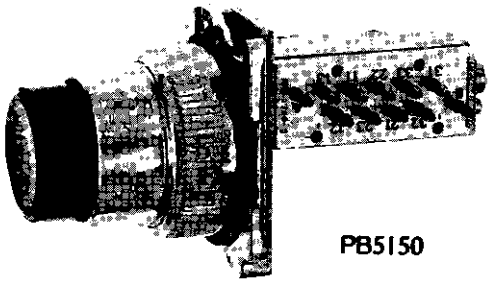

PB5150

Manual valves such as pushbuttons, rotary selectors, palm valves and foot valves are common devices that allow the operator to input information into the control of industrial machines and processes. This input information may range from a simple on-off to the selection of a very complex or sophisticated relationship as provided for by the machine control system. The actuation of a manual valve changes the condition of a signal to or within the control circuit. The control circuit then responds to this change in accordance with its design.

As the complexity of the control increases, the responsibility to qualify the manual input also increases to assure that the information provided by the operator is valid. This qualification always imposes an additional strain on the control relays, requiring more components and adding to the overall complexity of the design. The addition of a single manual input requirement often leads to a complete redesign of the control circuit. The primary reason for this complexity is that most manual valves are 3 way or 4 way (open exhaust) valves that can respond to manual actuation only and are not designed to provide a control logic function in addition to their manual operation. Hence, each manual must be combined with a relay to provide the qualifying capability.

The DYNAMCO pushbutton and rotary selector manual valves are different. The valves used by DYNAMCO are functionally the same relay valves described in Bulletin 300 Logic Components except that they can also be actuated manually by industrial standard oil-tight operators. The flexibility of passing and nonpassing flowpaths in either the 4 way, 5 ported or the multi-flow-path valve, the access to pilot ports "A" and "B", the selection of detented or spring returned valves, the ability to mount one or two valves behind each pushbutton or rotary selector and still be able to actuate the relay valve(s) manually provides you with circuit design capabilities with almost unlimited potential. These features, combined with the added ability of multi-mount connector plates (see page 16) that provide mounting space for additional logic components directly to the pushbutton and rotary selector valves, expand the DYNAMCO manual series of valves into a truly unique and highly useable addition to the growing field of air logic controls.

The operating principles of DYNAMCO manual valves are similar to the relays described in Bulletin 300, pages 4 and 5. Shown below to the left is a typical spring return valve that can be used with all the DYNAMCO operators. Manual actuation of a pushbutton, a rotary selector or a foot valve mechanically forces the spool from the left to the right via the exposed actuating stem. The air pilot ports "A" and "B" are located on either end of the spool, and ports 1 through 5 are the flowpaths of the valve. These flowpaths are either blocked (nonpassing) or connected to another port (passing) depending upon the position of the spool. Without mechanical actuation of the stem (or a pilot pressure at port "A"), the spring holds the spool in the position shown. This is referred to as the "B" position or the normal position of the spool. When the spool is in the "B" position, a control signal at port 1 will be blocked (nonpassing) while the signal at port 5 will be connected to port 4 (passing). As long as the spool remains in the "B" position, ports 1 to 2 will be nonpassing and ports 5 to 4 will be passing. When mechanical actuation of the stem occurs, the spool moves to the right, compressing the spring. As shown in the right view, this changes the condition of the flow passageways. This new position is referred to as spool position "A" or the alternate position. In the "A" position, ports 1 to 2 are passing and ports 5 to 4 are nonpassing. Port 3 is a common exhaust port exhausting port 2 when the spool is in the "B" position and exhausting port 4 when the spool is in the "A" position. These valves may also be used in a circuit with a common input or supply connected to port 3. The flow path from port 3 to port 2 would be passing as long as the spool was in the "B" position. When the manual operator is actuated, the spool shifts to the alternate "A" position and port 3 to port 4 becomes passing.

The DYNAMCO pushbuttons, selectors and foot valves shown in this bulletin reflect the models most frequently used. Additional combinations can be created by selecting operators and adapter kits separately (see adapter kit list, page 14).

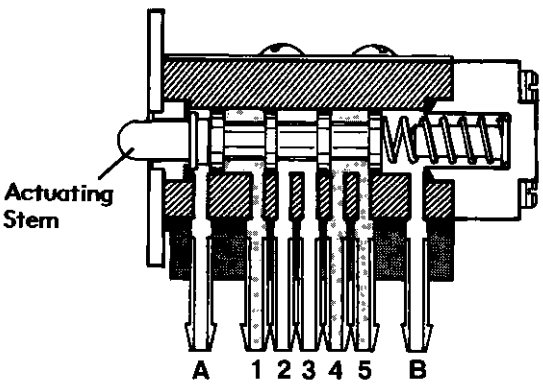

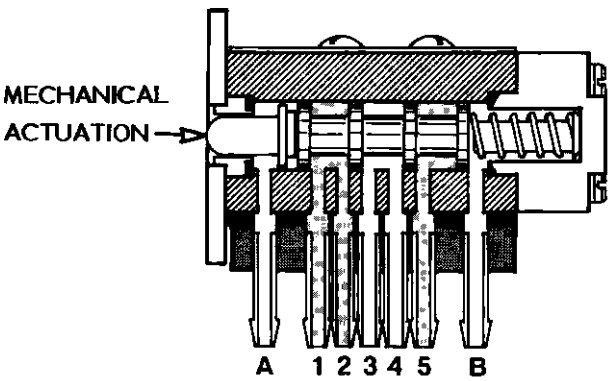

The operating function of manual valves can easily be shown on circuit diagrams through the use of symbols. The symbols used and recommended by DYNAMCO agree with the American National Standard Method of Diagramming for Moving Part Fluid Control, ANSI B93.38-1976.

Manual valve symbols consist of four parts. First, the ports of the device are shown and identified.

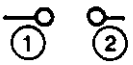

Second, a bridge is shown across the ports. A line parallel to the ports is used for all pushbuttons and rotary selectors. A line from the center of the left port extended either up or down on an angle is used for all foot valves. Note, the flow of air is from left to right. When the bridge makes contact with both ports, the flowpath is passing. When the bridge does not contact both ports, the flowpath is nonpassing. When nonpassing, the downstream pressure (to the right) is exhausted. The exhausted function is implied and its port is not shown.

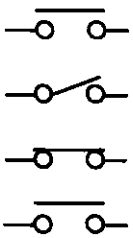

The third part of the symbol is the pictorial representation of the operator.

Flush or extended pushbutton

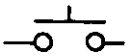

Mushroom head or palmbutton

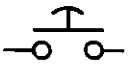

Latched pushbutton. A mechanical latch holds the pushbutton down when actuated. Pull to release.

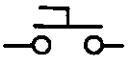

Two position rotary selector

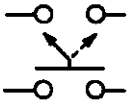

Multi-position rotary selector (more than two positions)

Foot operated, two position valve

Fourth, a S is shown under the bridge of all spring return valves and a dash line is used to show the second position of the bridge on all detented valves. Typical examples are as follows:

Pushbutton, Spring Returned, Nonpassing Flowpath

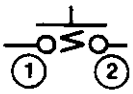

Palmbutton, Spring Returned, Passing Flowpath

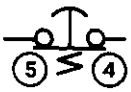

Pushbutton, Detented, Nonpassing Flowpath

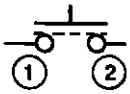

Pushbutton, Spring Returned with both Passing and Nonpassing Flowpath Shown

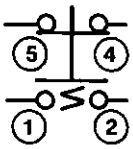

Pushbutton, Spring Returned with both Passing and Nonpassing Flowpath Shown, Common Input

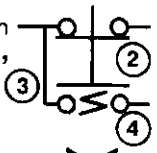

Rotary Selector, Maintained Two Position, Nonpassing Flowpath

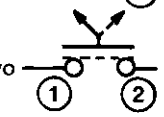

Foot Valve, Spring Returned, Nonpassing Flowpath

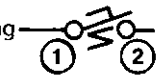

Rotary Selector, Three Position, Spring Returned To Center

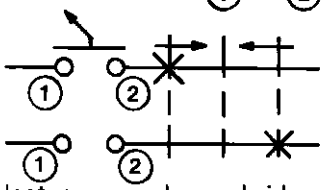

The multi-position rotary selector uses only one bridge, but shows as many flowpaths beneath this bridge as are used in the circuit. The number of positions of the selector are shown with vertical dashed lines (one for each position) to the right of the flowpath. An "X" is placed at the appropriate intersection of the position and the flowpath where that flowpath is passing. Any intersection of a vertical position line and the flowpath line not having an "X" is not passing when a selector is in that position.

Pushbuttons, selectors and foot valve symbols are identified with the letters PB, SV and FV respectively, and these letters then followed with an assigned consecutive number to identify the particular pushbutton, selector or foot valve. A description of the function which each performs during the cycle is also shown above the symbol.

The air pilot ports "A" and "B" are also available and can be used to accomplish logic functions much like a standard air logic relay. When ports "A" or "B" are used they are shown on the circuit diagram using the same symbol as the corresponding ports of the standard air logic relay; that is, a circle for the "A" port and a circle within a square for the "B" port of spring return valves. Squares are used for both the "A" and the "B" port to identify the detented valves. These symbols are then identified as PB, SV or FV, depending upon the type of operator, followed by the same numeric identification as that assigned to the flowpath symbol and then either "A" or "B" depending upon the port represented by the symbol. Also, as a convenience to the reader of the finished circuit diagram, an arrow pointing to the letter "A" or to the letter "B" located adjacent to the flowpath symbol to indicate that the pilot ports of the manual valve are also being used. Typical examples of manual valve symbols are shown in the circuit diagram on pages 16 and 20.

The DYNAMCO manual valve has the ability to use its output to pneumatically latch itself into the alternate "A" position (see typical circuit, page 16). This latching in feature is but one of the many characteristics that makes DYNAMCO pushbuttons, selectors and foot valves the most versatile and easy to use of all the manually operated valves.

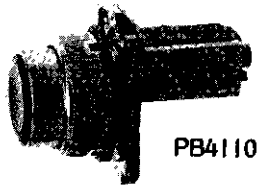

STANDARD SIZE OPERATORS

PUSHBUTTONS
STANDARD SIZE OPERATORS
MODEL NUMBER SELECTION

PB4 — 1 — 1 — 0

OPERATOR
PB4- Flush Pushbutton
PB5- Extended Pushbutton
PB6- Mushroom Pushbutton
PB7- Jumbo Mushroom Pushbutton
PB8- Push/Pull Pushbutton

COLOR
1- Black
2- Green
3- Red
5- Yellow

VALVE TYPE POSITION #1
1- Type 1 - 4 Way Spr. Ret. 1/16
2- Type 2 - 4 Way Spr. Ret. 10-32
3- Type 3 - 4 Way Detent 1/16
4- Type 4 - 4 Way Detent 10-32
5- Type 5 - Multi-Flow Spr. Ret. 1/16
6- Type 6 - Multi-Flow Detent 1/16

VALVE TYPE POSITION #2

Check chart below for available combinations

DESCRIPTION PUSHBUTTON VALVES STANDARD SIZE OPERATORS	COLOR	MODELS						OPERATOR ONLY
		4 WAY, 5 PORT VALVE ASSEMBLIES				MULTI-FLOW-PATH		
		Spring Return		Detented		Spr. Ret.	Detented	
		*PBS 1/16 (Type 1)	PBS 10-32 (Type 2)	PBD 1/16 (Type 3)	PBD 10-32 (Type 4)	MPS 1/16 (Type 5)	MPD 1/16 (Type 6)	
FLUSH 	Black	PB4110	PB4120	PB4130	PB4140	PB4150	PB4160	1135-1
	Green	PB4210	PB4220	PB4230	PB4240	PB4250	PB4260	1135-2
	Red	PB4310	PB4320	PB4330	PB4340	PB4350	PB4360	1135-3
	Yellow	PB4510	PB4520	PB4530	PB4540	PB4550	PB4560	1135-5
EXTENDED 	Black	PB5110	PB5120	PB5130	PB5140	PB5150	PB5160	1136-1
	Green	PB5210	PB5220	PB5230	PB5240	PB5250	PB5260	1136-2
	Red	PB5310	PB5320	PB5330	PB5340	PB5350	PB5360	1136-3
MUSHROOM 	Black	PB6110	PB6120	PB6130	PB6140	PB6150	PB6160	1137-1
	Green	PB6210	PB6220	PB6230	PB6240	PB6250	PB6260	1137-2
	Red	PB6310	PB6320	PB6330	PB6340	PB6350	PB6360	1137-3
	Yellow	PB6510	PB6520	PB6530	PB6540	PB6550	PB6560	1137-5
JUMBO MUSHROOM 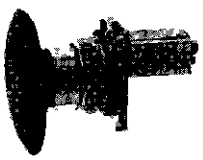	Black	PB7110	PB7120	PB7130	PB7140	PB7150	PB7160	1139-1
PUSH/PULL 	Black	PB8110	PB8120			PB8150		1149-1
	Green	PB8210	PB8220			PB8250		1149-2
	Red	PB8310	PB8320			PB8350		1149-3
VALVE ADAPTER KIT ONLY		1017-1	1017-2	1017-3	1017-4	1023-1	1024-1	

DISCONTINUED

*Valve at Position #1

STANDARD SIZE OPERATORS

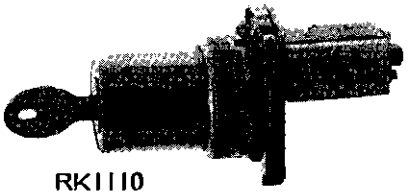

RK1110

2 POSITION ROTARY SELECTORS STANDARD SIZE OPERATORS MODEL NUMBER SELECTION

RK1 — OPERATOR

1 — VALVE ACTUATION

1 — VALVE TYPE POSITON #1

0 — VALVE TYPE POSITION #2

RK1- Key, Detented Left and Right
RK2- Key, Spring Returned Right to Center
RS1- Knob, Detented Left and Right
RS2- Knob, Spring Returned Right to Center

1- #1 0 X
#2 0 X

1- Type 1 - 4 Way Spr. Ret. 1/16
2- Type 2 - 4 Way Spr. Ret. 10-32

Check chart below for available combinations

DESCRIPTION TWO POSITION ROTARY SELECTOR VALVES, STANDARD SIZE OPERATORS	VALVE*** ACTUATION	MODELS 4 WAY, 5 PORT VALVE ASSEMBLIES						OPERATOR ONLY
		*PBS 1/16 (Type 1)	PBS 1/16 (Type 1)	PBS 1/16 (Type 1)	PBS 10-32 (Type 2)	PBS 10-32 (Type 2)	PBS 10-32 (Type 2)	
		**	PBS 1/16 (Type 1)	PBS 10-32 (Type 2)		PBS 1/16 (Type 1)	PBS 10-32 (Type 2)	
KEY OPERATOR DETENTED- Left and Right Positions	#1 0 X #2 0 X	RK1110	RK1111	RK1112	RK1120	RK1121	RK1122	1141-5
KNOB OPERATOR DETENTED- Left and Right Positions	#1 0 X #2 0 X	RS1110	RS1111	RS1112	RS1120	RS1121	RS1122	1141-1
VALVE ADAPTER KITS ONLY		1017-1	1018-1	1018-2	1017-2	1018-3	1018-4	

* Valve at Position #1
** Valve at Position #2
***Valve actuation for each position of the selector "0"- Valve released; "X"- Valve actuated

Example: #1 0 X Valve at Position #1 released when selector is rotated left and actuated when selector is rotated right.

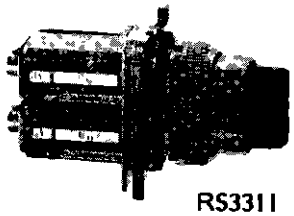

RS3311

3 POSITION ROTARY SELECTORS STANDARD SIZE OPERATORS MODEL NUMBER SELECTION

STANDARD SIZE OPERATORS

RS3 3 1 1

OPERATOR
RK3- Key, Detented all Positions
RK5- Key, Spring Returned to Center
RS3- Knob, Detented all Positions
RS4- Knob, Detented Right- Spring Returned Left to Center
RS5- Knob, Spring Returned to Center
RS6- Knob, Detented Left- Spring Returned Right to Center

VALVE ACTUATION
3- #1 X 0 0
#2 0 0 X

VALVE TYPE POSITION #1
VALVE TYPE POSITION #2
1- Type 1 - 4 Way Spr. Ret. 1/16
2- Type 2 - 4 Way Spr. Ret. 10-32

Check chart below for available combinations

DESCRIPTION THREE POSITION ROTARY SELECTOR VALVES STANDARD SIZE OPERATORS	VALVE*** ACTUATION	MODELS 4 WAY, 5 PORT VALVE ASSEMBLIES				OPERATOR ONLY
		* PBS 1/16 (Type 1)	PBS 1/16 (Type 1)	PBS 10-32 (Type 2)	PBS 10-32 (Type 2)	
		**PBS 1/16 (Type 1)	PBS 10-32 (Type 2)	PBS 1/16 (Type 1)	PBS 10-32 (Type 2)	
KEY OPERATOR DETENTED- Left, Center and Right Positions	#1 X 0 0 #2 0 0 X	RK3311	RK3312	RK3321	RK3322	1147-3
KEY OPERATOR SPRING RETURNED to Center Position	#1 X 0 0 #2 0 0 X	RK5311	RK5312	RK5321	RK5322	1148-5
KNOB OPERATOR DETENTED- Left, Center and Right Positions	#1 X 0 0 #2 0 0 X	RS3311	RS3312	RS3321	RS3322	1143-3
KNOB OPERATOR DETENTED- Right, SPRING RETURNED-Left to Center	#1 X 0 0 #2 0 0 X	RS4311	RS4312	RS4321	RS4322	1144-3
KNOB OPERATOR SPRING RETURNED- Left or Right to Center	#1 X 0 0 #2 0 0 X	RS5311	RS5312	RS5321	RS5322	1145-3
KNOB OPERATOR DETENTED- Left, SPRING RETURNED-Right to Center	#1 X 0 0 #2 0 0 X	RS6311	RS6312	RS6321	RS6322	1146-3
VALVE ADAPTER KIT ONLY		1018-1	1018-2	1018-3	1018-4	

*Valve at Position #1 **Valve at Position #2 ***See note Page 5

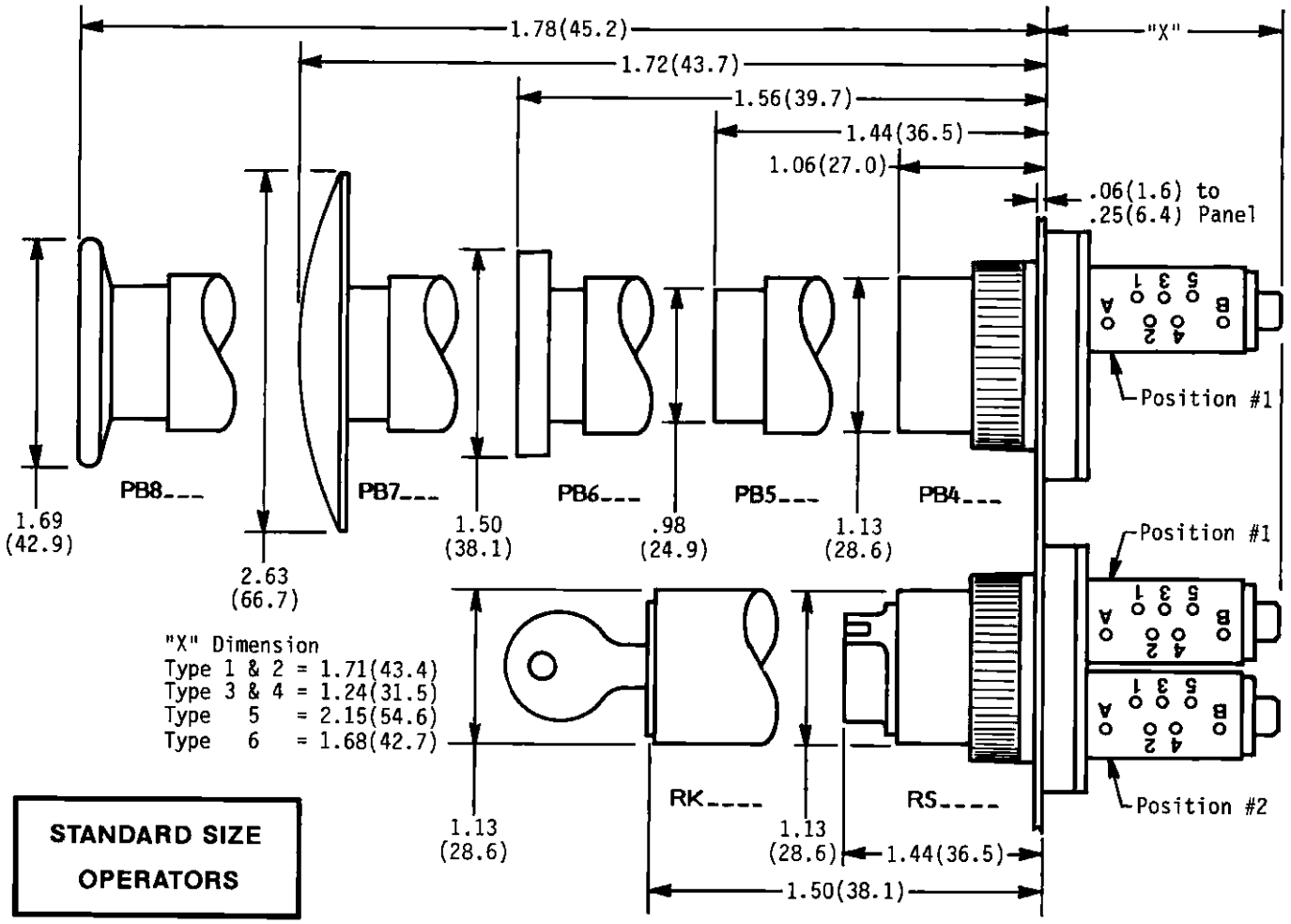

STANDARD SIZE OPERATORS

INSTALLATION DIMENSIONS
STANDARD SIZE OPERATORS

Dimensions in inches (mm)

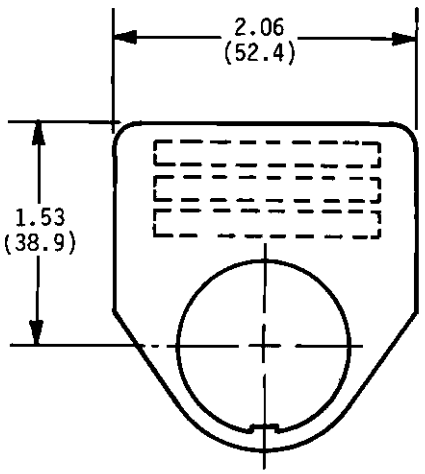

PBI1 = 1 Inscription Line

PBI2 = 2 Inscription Lines

PBI3 = 3 Inscription Lines

Maximum 16 characters per Inscription Line

.13(3.2) Character Height

To Order - Specify Model Number and Inscription desired.

408-3 = Blank Plate

LEGEND PLATES
MODELS PBI1, PBI2, PBI3

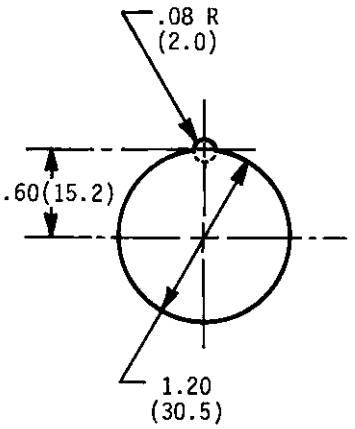

PANEL MOUNTING HOLE

PUSHBUTTONS
MINIATURE SIZE OPERATORS
MODEL NUMBER SELECTION

PBM4110

MINIATURE SIZE OPERATORS

PBM4 — OPERATOR
PBM4- Flush Pushbutton
PBM5- Extended Pushbutton
PBM6- Mushroom Pushbutton

COLOR
1- Black
2- Green
3- Red
5- Yellow

VALVE TYPE POSITION #1
1- Type 1 - 4 Way Spr. Ret. 1/16
2- Type 2 - 4 Way Spr. Ret. 10-32
3- Type 3 - 4 Way Detent 1/16
4- Type 4 - 4 Way Detent 10-32
5- Type 5 - Multi-Flow Spr. Ret. 1/16
6- Type 6 - Multi-Flow Detent 1/16

VALVE TYPE POSITION #2
0

Check chart below for available combinations

DESCRIPTION PUSHBUTTON VALVES MINIATURE SIZE OPERATORS	COLOR	MODELS						OPERATOR ONLY
		4 WAY, 5 PORT VALVE ASSEMBLIES				MULTI-FLOW-PATH		
		Spring Return		Detented		Spr. Ret.	Detented	
		*PBMS 1/16 (Type 1)	PBMS10-32 (Type 2)	PBMD 1/16 (Type 3)	PBMD 10-32 (Type 4)	MPMS 1/16 (Type 5)	MPMD 1/16 (Type 6)	
FLUSH 	Black	PBM4110	PBM4120	PBM4130	PBM4140	PBM4150	PBM4160	1416-1
	Green	PBM4210	PBM4220	PBM4230	PBM4240	PBM4250	PBM4260	1416-2
	Red	PBM4310	PBM4320	PBM4330	PBM4340	PBM4350	PBM4360	1416-3
EXTENDED 	Black	PBM5110	PBM5120	PBM5130	PBM5140	PBM5150	PBM5160	1417-1
	Green	PBM5210	PBM5220	PBM5230	PBM5240	PBM5250	PBM5260	1417-2
	Red	PBM5310	PBM5320	PBM5330	PBM5340	PBM5350	PBM5360	1417-3
MUSHROOM 	Black	PBM6110	PBM6120	PBM6130	PBM6140	PBM6150	PBM6160	1418-1
	Green	PBM6210	PBM6220	PBM6230	PBM6240	PBM6250	PBM6260	1418-2
	Red	PBM6310	PBM6320	PBM6330	PBM6340	PBM6350	PBM6360	1418-3
	Yellow	PBM6510	PBM6520	PBM6530	PBM6540	PBM6550	PBM6560	1418-5
VALVE ADAPTER KIT ONLY		1408-1	1408-2	1408-3	1408-4	1414-1	1415-1	

DISCONTINUED

*Valve at Position #1

2 POSITION ROTARY SELECTORS
MINIATURE SIZE OPERATORS
MODEL NUMBER SELECTION

MINIATURE SIZE OPERATORS

RSM1110

RSMI — OPERATOR

RKM1- Key, Detented Left and Right
RSM1- Knob, Detented Left and Right

I — VALVE ACTUATION

1- #1 0 X
#2 0 X

I — VALVE TYPE POSITION #1

1- Type 1 - 4 Way Spr. Ret. 1/16
2- Type 2 - 4 Way Spr. Ret. 10-32

0 — VALVE TYPE POSITION #2

Check chart below for available combinations

DESCRIPTION TWO POSITION ROTARY SELECTOR VALVES MINIATURE SIZE OPERATORS	VALVE*** ACTUATION	MODELS 4 WAY, 5 PORT VALVE ASSEMBLIES					OPERATOR ONLY
		* PBMS 1/16 (Type 1) **	PBMS 1/16 (Type 1) PBMS 1/16 (Type 1)	PBMS 1/16 (Type 1) PBMS 10-32 (Type 2)	PBMS 10-32 (Type 2)	PBMS 10-32 (Type 2) PBMS 10-32 (Type 2)	
KEY OPERATOR DETENTED- Left and Right Positions	#1 0 X #2 0 X	RKM1110	RKM1111	RKM1112	RKM1120	RKM1122	1420-5
KNOB OPERATED DETENTED- Left and Right Positions	#1 0 X #2 0	RSM1110	RSM1111	RSM1112	RSM1120	RSM1122	1420-1
VALVE ADAPTER KIT ONLY		1408-1	1409-1	1409-2	1408-2	1409-4	

DISCONTINUED

* Valve at Position #1
** Valve at Position #2
***Valve actuation for each position of the selector "0" - Valve released; "X" - Valve actuated

Example: #1 0 X Valve at Position #1 released when selector is rotated left and actuated when selector is rotated right.

3 POSITION ROTARY SELECTORS
MINIATURE SIZE OPERATORS
MODEL NUMBER SELECTION

MINIATURE SIZE OPERATORS

RSM3311

RSM3 — 3 — 1 — 1

OPERATOR
RKM3- Key, Detented all Positions
RSM3- Knob, Detented all Positions
RSM4- Knob, Detented Right- Spring Returned Left to Center
RSM5- Knob, Spring Returned to Center
RSM6- Knob, Detented Left- Spring Returned Right to Center

VALVE ACTUATION
3- #1 X 0 0
#2 0 0 X

VALVE TYPE POSITION #1
1- Type 1 - 4 Way Spr. Ret. 1/16
2- Type 2 - 4 Way Spr. Ret. 10-32

VALVE TYPE POSITION #2

Check chart below for available combinations

DESCRIPTION THREE POSITION ROTARY SELECTOR VALVES MINIATURE SIZE OPERATORS	VALVE*** ACTUATION	MODELS 4 WAY, 5 PORT VALVE ASSEMBLIES			OPERATOR ONLY
		*PBMS 1/16 (Type 1)	PBMS 1/16 (Type 1)	PBMS 10-32 (Type 2)	
		**PBMS 1/16 (Type 1)	PBMS 10-32 (Type 2)	PBMS 10-32 (Type 2)	
KEY OPERATOR DETENTED- LEFT, CENTER and Right Positions	#1 X 0 0 #2 0 0 X	RKM3311	RKM3312	RKM3322	1425-3
KNOB OPERATOR DETENTED- Left, Center and Right Positions	#1 X 0 0 #2 0 0 X	RSM3311	RSM3312	RSM3322	1421-3
KNOB OPERATOR DETENTED- Right, SPRING RETURNED- Left to Center	#1 X 0 0 #2 0 0 X	RSM4311	RSM4312	RSM4322	1422-3
KNOB OPERATOR SPRING RETURNED- Left or Right to Center	#1 X 0 0 #2 0 0 X	RSM5311	RSM5312	RSM5322	1423-3
KNOB OPERATOR DETENTED- Left, SPRING RETURNED- Right to Center	#1 X 0 0 #2 0 0 X	RSM6311	RSM6312	RSM6322	1424-3
VALVE ADAPTER KIT ONLY		1409-1	1409-2	1409-4	

DISCONTINUED

*Valve at Position #1 **Valve at Position #2 ***See note Page 9

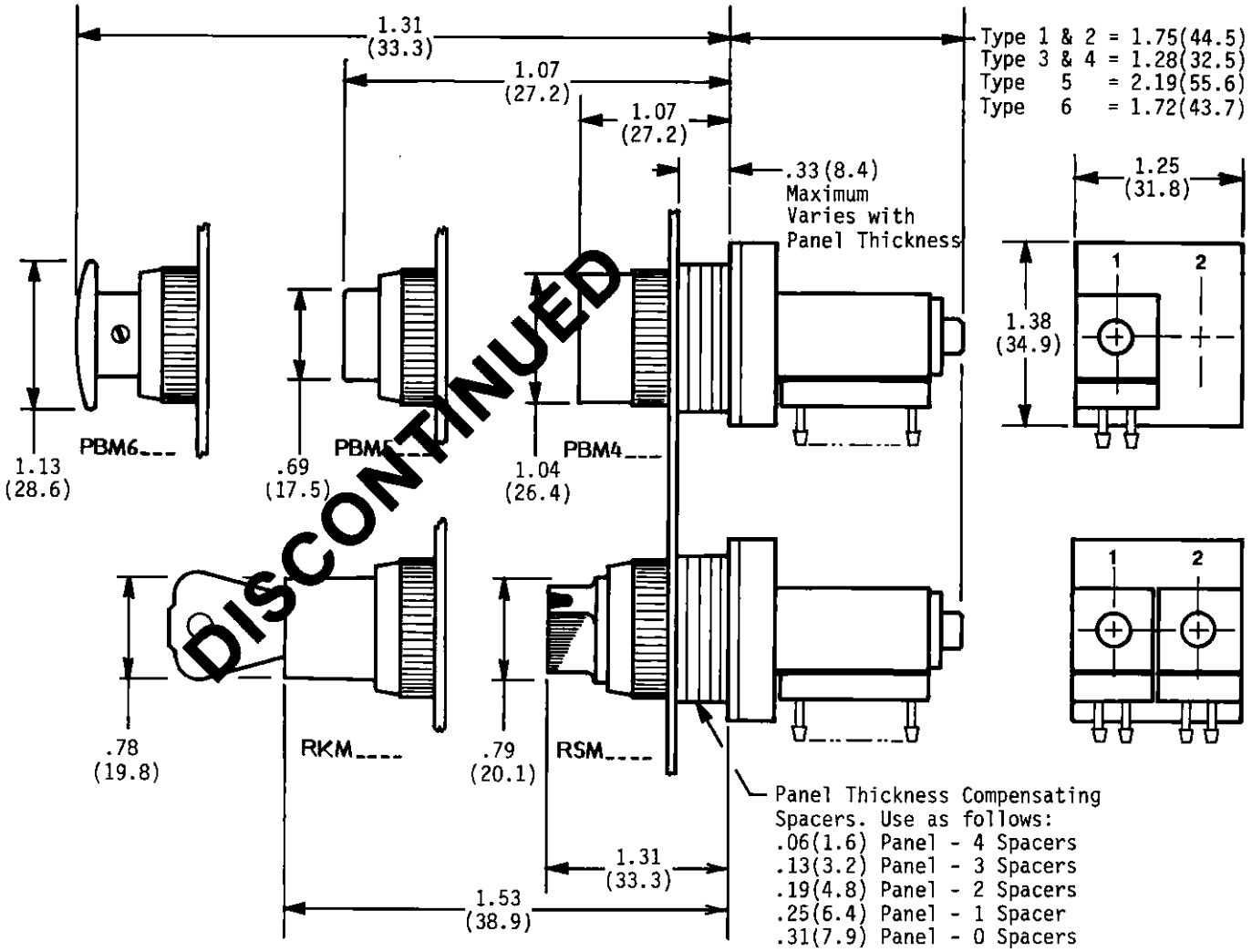

MINIATURE SIZE OPERATORS

INSTALLATION DIMENSIONS MINIATURE SIZE OPERATORS

Dimensions in inches (mm)

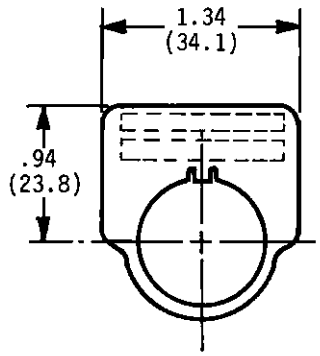

PML1 = 1 Inscription Line

PML2 = 2 Inscription Lines

Maximum 10 Characters per Inscription Line

.11(2.8) Character Height

To Order - Specify Model Number and Inscription desired

408-4 = Blank Plate

LEGEND PLATES MODELS PML1, PML2

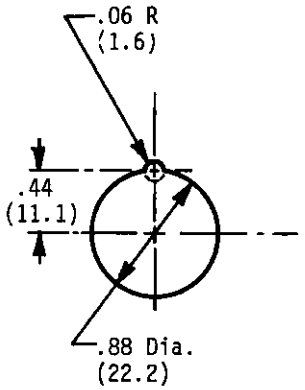

PANEL MOUNTING HOLE

DYNAMCO's HDP3 and HDP4 palm operated valves are ideally suited for applications that require a rugged mechanism to withstand day in, day out thumping and hammering. They stand up to difficult industrial applications. The unit is oil tight and dust tight to keep foreign matter out of the mechanism and valve. Any downward motion of the button (even if it is only on one side) will cause the valve to shift. Internally, the unit translates any inward motion of the button to a straight line motion suitable to actuate the valve. A guard is available to protect against accidental actuation of the button.

DYNAMCO's Heavy Duty Palm button valves come in two basic configurations, flush mount and surface mount.

1. The flush mount HDP3 requires that a clearance hole be cut in the surface where the button is to be mounted. (See drawing below) The valve then protrudes below this surface. A gasket is provided to seal the interface between the flush unit and its mounting.
2. The surface mount HDP4 comes complete with its own housing and conduit connection.

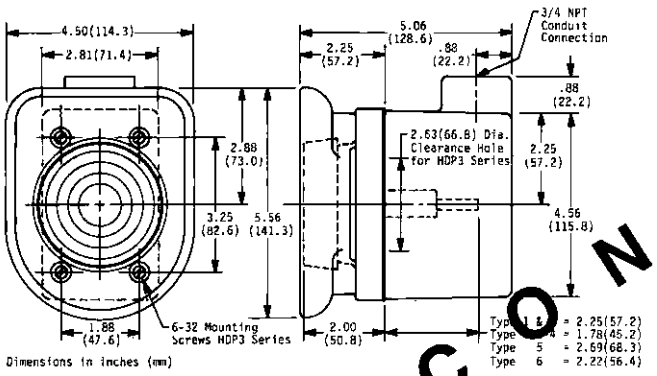

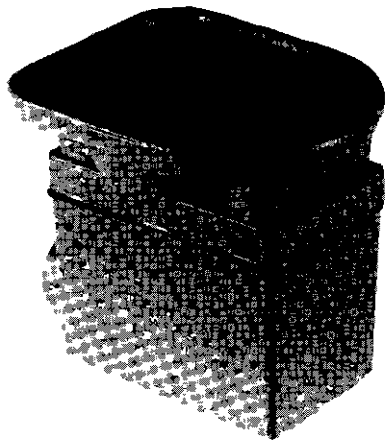

HDP4210 with optional GUARD 552-1*

The HDP3 or HDP4 Series is available with a 4 way, 5 port or a Multi-flow-path lapped spool valve. These valves can be spring return or detented air return. The spring return valve will return to the "B" condition immediately when the operator releases the button. The detented valve will remain in the "A" condition after actuation. Later, it can be returned to the "B" condition any time a pressure signal is applied to its B pilot and the operator is not holding the button depressed.

The palm button is 3 inches in diameter (76.2mm) and has a slight concave shape. Four different color palm buttons are available by model selection. The color can be field-changed by snapping out the color insert and replacing it with one listed below.

DESCRIPTION HEAVY DUTY PALM BUTTON VALVES	COLOR	MODELS					
		4 WAY, 5 PORT VALVE ASSEMBLIES				MULTI-FLOW-PATH	
		Spring Return		Detented		Spr. Ret.	Detented
		HPS 1/16 (Type 1)	HPS 10-32 (Type 2)	HPD 1/16 (Type 3)	HPD 10-32 (Type 4)	HPMS 1/16 (Type 5)	HPMD 1/16 (Type 6)
FLUSH MOUNT (DOES NOT INCLUDE HOUSING OR GUARD) 	No Insert	HDP3010	HDP3020	HDP3030	HDP3040	HDP3050	HDP3060
	Black	HDP3110	HDP3120	HDP3130	HDP3140	HDP3150	HDP3160
	Green	HDP3210	HDP3220	HDP3230	HDP3240	HDP3250	HDP3260
	Red	HDP3310	HDP3320	HDP3330	HDP3340	HDP3350	HDP3360
	Yellow	HDP3510	HDP3520	HDP3530	HDP3540	HDP3550	HDP3560
SURFACE MOUNT (INCLUDES HOUSING DOES NOT INCLUDE GUARD) 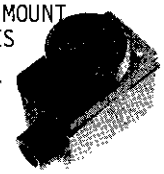	No Insert	HDP4010	HDP4020	HDP4030	HDP4040	HDP4050	HDP4060
	Black	HDP4110	HDP4120	HDP4130	HDP4140	HDP4150	HDP4160
	Green	HDP4210	HDP4220	HDP4230	HDP4240	HDP4250	HDP4260
	Red	HDP4310	HDP4320	HDP4330	HDP4340	HDP4350	HDP4360
	Yellow	HDP4510	HDP4520	HDP4530	HDP4540	HDP4550	HDP4560
ADAPTER KIT ONLY		1441-2	1441-3	1441-4	1441-5	1441-6	1441-7

552-1 *Protective guard as shown installed above
552-5 Black, Snap-in Color Insert
552-6 Green, Snap-in Color Insert
552-7 Red, Snap-in Color Insert
552-8 Yellow, Snap-in Color Insert

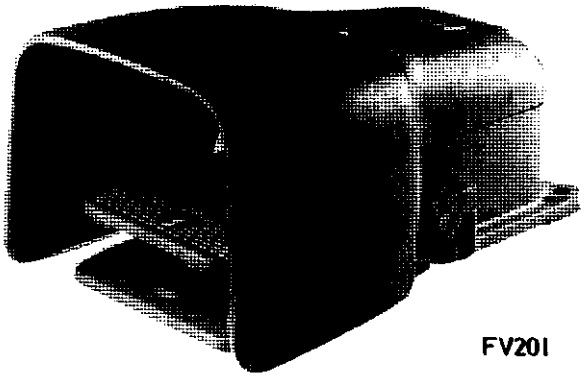

FV201

DYNAMCO's Foot Valves FV Series are ideally suited for applications that require a rugged mechanism to withstand the day in, day out physical abuse that most foot valves experience in today's industrial plants. The unit is oil tight and dust tight to keep foreign matter out of the mechanism and the valve contained within its enclosure. Downward motion of the foot treadle is transmitted to the valve causing it to shift. The valve can be either a spring returned or detented air return valve with either 1/16 barb connections or 10-32 UNF ports. See chart below for available models. The spring return valve will return to the "B" condition immediately when the operator releases the treadle. The detented valves will remain in the "A" condition after actuation. Later, the detented valves can be returned to the "B" condition any time a pressure signal is applied to its B pilot and the operator is not holding the treadle depressed. The foot valves have a 3 point mount and conduit connection for convenient installation.

DISCONTINUED

MODELS	4 WAY, 5 PORT VALVE ASSEMBLIES	VALVE TYPE	ADAPTER KIT
FV201	FVS 1/16 Barbed Ports, Spring Returned	1	1008-1
FV202	FVS 10-32 UNF Ports, Spring Returned	2	1008-2
FV203	FVD 1/16 Barbed Ports, Detented	3	1008-3
FV204	FVD 10-32 UNF Ports, Detented	4	1008-4

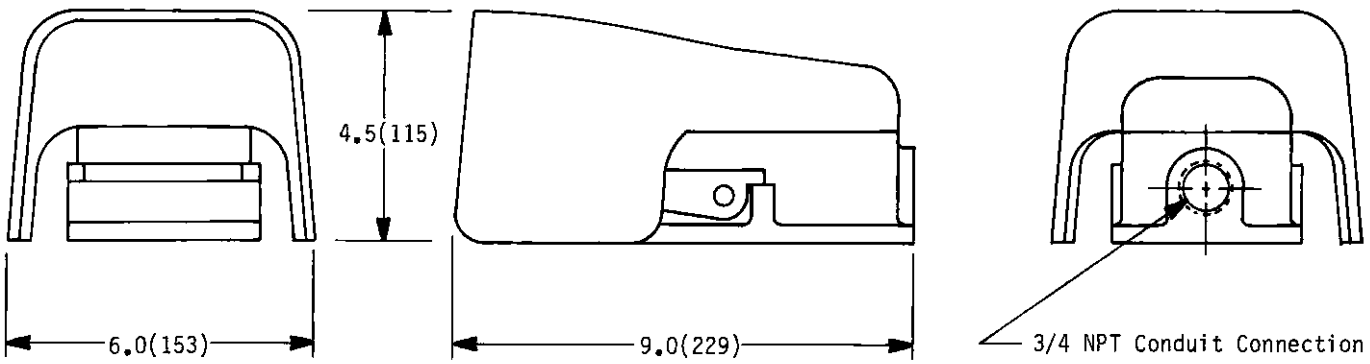

Dimensions in inches (mm)

ADAPTER KITS

DYNAMCO's manual valves are available with six (6) different types of valves (see chart at right for listing). These different valve types reflect the selection of 4 way or Multi-flow-path valves, spring returned or detented valves and either 1/16 barbed or 10-32 ported valve bases (10-32 not available in Multi-flow-path valves). Each of these six (6) different valves can be mounted to the manual operator at either Position #1, Position #2 or at both positions. (Note: Heavy Duty Palm Buttons can accept valves at Position #1 only.) The models shown on previous pages of this bulletin reflect the most common combinations of valves and operators. The chart below lists all of the possible combinations of valve types and locations that are available for each different type of operator. These adapter kits can be combined with the noted manual operators to accomplish combinations not previously listed by model numbers.

MANUAL VALVE TYPES

Type 1- 4 Way Spring Returned 1/16 Barbed Base
Type 2- 4 Way Spring Returned 10-32 UNF Base
Type 3- 4 Way Detented 1/16 Barbed Base
Type 4- 4 Way Detented 10-32 UNF Base
Type 5- Multi-flow-path Spring Returned 1/16 Barbed
Type 6- Multi-flow-path Detented 1/16 Barbed Base

VALVE TYPE AT POSITION #1 OF ADAPTER KIT	VALVE TYPE AT POSITION #2 OF ADAPTER KIT	ADAPTER KITS FOR STANDARD SIZE OPERATORS-PB____ RK____,RS____	ADAPTER KITS FOR MINIATURE SIZE OPERATORS-PBM____ RKM____,RSM____	ADAPTER KITS FOR HEAVY DUTY PALM BUTTON VALVES HDP3__ , HDP4___	ADAPTER KITS FOR FOOT VALVES FV___
Type 1	-	1017-1	1408-1	1441-2	1008-1
Type 2	-	1017-2	1408-2	1441-3	1008-2
Type 3	-	1017-3	1408-3	1441-4	1008-3
Type 4	-	1017-4	1408-4	1441-5	1008-4
-	Type 1	1017-5	1408-5	-	-
-	Type 2	1017-6	1408-6	-	-
-	Type 3	1017-7	1408-7	-	-
-	Type 4	1017-8	1408-8	-	-
Type 1	Type 1	1018-1	1409-1	-	-
Type 1	Type 2	1018-2	1409-2	-	-
Type 2	Type 1	1018-3	1409-3	-	-
Type 2	Type 2	1018-4	1409-4	-	-
Type 3	Type 3	1018-5	1409-5	-	-
Type 3	Type 4	1018-6	1409-6	-	-
Type 4	Type 3	1018-7	1409-7	-	-
Type 4	Type 4	1018-8	1409-8	-	-
Type 1	Type 3	1019-1	1410-1	-	-
Type 1	Type 4	1019-2	1410-2	-	-
Type 2	Type 3	1019-3	1410-3	-	-
Type 2	Type 4	1019-4	1410-4	-	-
Type 3	Type 1	1019-5	1410-5	-	-
Type 3	Type 2	1019-6	1410-6	-	-
Type 4	Type 1	1019-7	1410-7	-	-
Type 4	Type 2	1019-8	1410-8	-	-
-	Type 5	1020-1	1411-1	-	-
-	Type 6	1020-2	1411-2	-	-
Type 1	Type 5	1020-6	1411-6	-	-
Type 1	Type 6	1020-7	1411-7	-	-
Type 2	Type 5	1021-1	1412-1	-	-
Type 2	Type 6	1021-2	1412-2	-	-
Type 3	Type 5	1021-6	1412-6	-	-
Type 3	Type 6	1021-7	1412-7	-	-
Type 4	Type 5	1022-1	1413-1	-	-
Type 4	Type 6	1022-2	1413-2	-	-
Type 5	-	1023-1	1414-1	1441-6	-
Type 5	Type 1	1023-2	1414-2	-	-
Type 5	Type 2	1023-3	1414-3	-	-
Type 5	Type 3	1023-4	1414-4	-	-
Type 5	Type 4	1023-5	1414-5	-	-
Type 5	Type 5	1023-6	1414-6	-	-
Type 5	Type 6	1023-7	1414-7	-	-
Type 6	-	1024-1	1415-1	1441-7	-
Type 6	Type 1	1024-2	1415-2	-	-
Type 6	Type 2	1024-3	1415-3	-	-
Type 6	Type 3	1024-4	1415-4	-	-
Type 6	Type 4	1024-5	1415-5	-	-
Type 6	Type 5	1024-6	1415-6	-	-
Type 6	Type 6	1024-7	1415-7	-	-

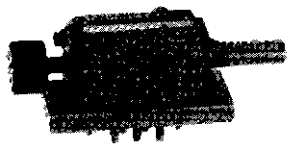

LRHI

MODEL LRH * Spring Returned (25 psig)
4 Way, 5 Port Pushbutton
* 0 - Without Baseplate
1 - 1/16 Barb Baseplate, Bot. Ports
2 - 1/16 Barb Baseplate, Side Ports
4 - 10-32 UNF Baseplate, Bot. Ports
5 - 10-32 UNF Baseplate, Side Ports.

SYMBOL

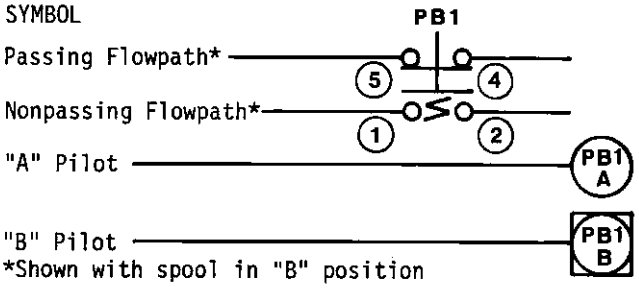

*Shown with spool in "B" position

Model LRH0 furnished with gasket and mounting screws. Other models furnished mounted to baseplate.

The "LRH" Series Pushbutton is designed for mounting directly to the standard relay station cutouts found in the "CC" Series Enclosures or the universal chassis. Since they can be mounted like any other logic component, the "LRH" Series provides a convenient way to introduce manual input signals into a control system.

See Bulletin 300 for additional baseplate dimensions.

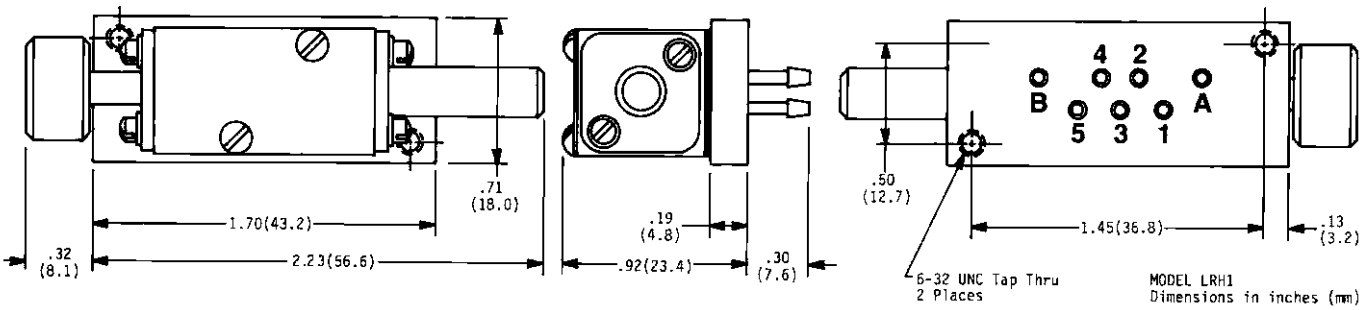

CONNECTOR PLATES

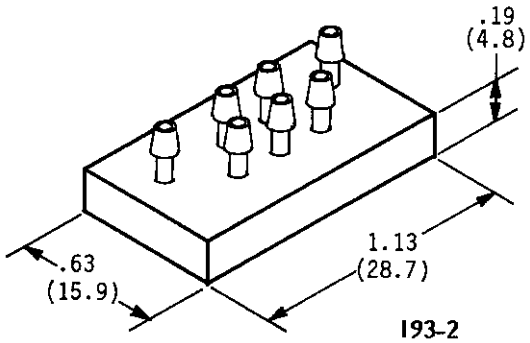

The connector plates shown at the left and below are used on all DYNAMCO "PB", "PBM", "RK", "RKM", "RS", "RSM", "HDP" AND "FV" Series Manual Valves.

193-2 used with all Type 1 and Type 3 (4 way-5 port) valves. Provides 1/16 barbed tube connections for all pilot and flowpath ports.

1168-1 used with all Type 2 and Type 4 (4 way-5 port) valves. Provided 10-32 UNF connections for all pilot and flowpath ports.

1289-2 used with all Type 5 and Type 6 (Multi-flow-path) valves. Provides 1/16 barbed tube connections for all pilot and flowpath ports.

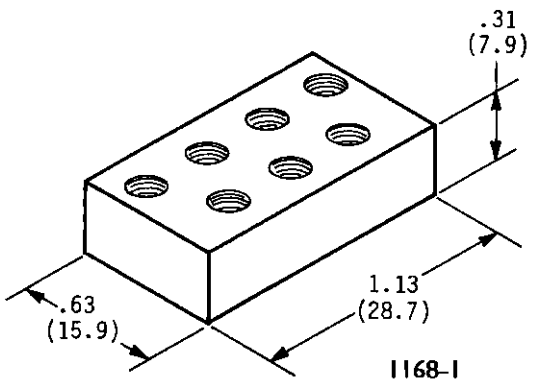

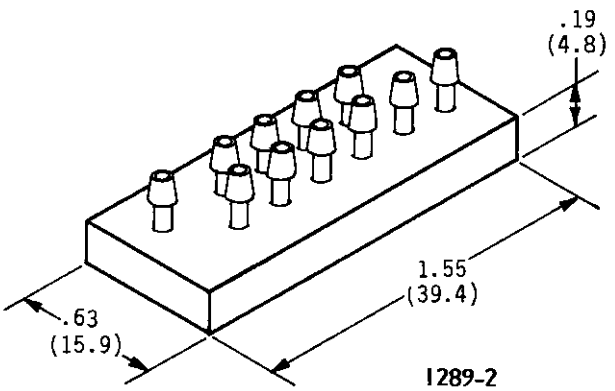

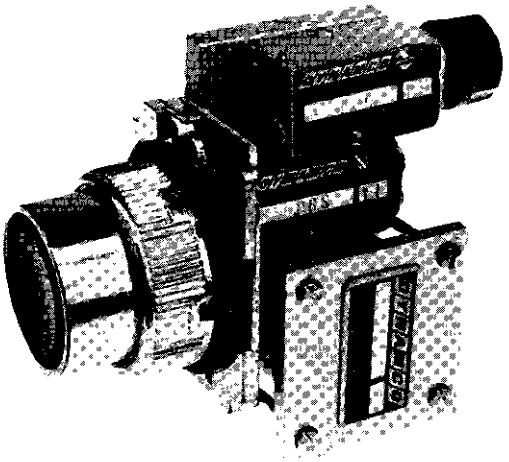

TYPICAL MULTIPLE CONNECTOR PLATE AND PUSHBUTTON ASSEMBLY

DYNAMCO Multiple Connector Plates provide space for mounting additional relays, shuttles, flow controls and volume chambers to pushbutton and rotary selector manual valves. This allows some control logic relationships to be accomplished right at the point of manual input rather than at the conventional control panel. These multiple connector plates mount in place of the connector plates used on pushbuttons and rotary selectors and are held in place by the relay valve mounting screws.

Four (4) different models of multiple connector plates are available. They are Models 1165-7, 1165-8, 1183-1 and 1242-1.

Models 1165-7 and 1165-8 have a volume chamber as an integral part of the multiple connector plate. Model 1165-7 has a large volume chamber equivalent to a VC1 volume chamber. Model 1165-8 has a small volume chamber equivalent to a VC2 volume chamber. Both models mount to the manual valve at position 2 of either standard size or miniature size pushbuttons or rotary selectors. The manual valve would mount to the multiple connector plate in the location shown on page 17. One (1) additional space is provided on Models 1165-7 and 1165-8 to mount a logic component. Any DYNAMCO "L" series relay, FCO (or FFCO) flow control, ORO shuttle or VOO variable orifice can be mounted at this position. Since these multiple connector plates contain a volume chamber, most Models 1165-7 and 1165-8 will be used in time related circuits such as timed pulse, timing out or two hand non-tie-down circuits. Refer to Bulletin 300 for recommended time periods and other circuits. A typical time pulse circuit which can be constructed using a pushbutton operator (1135-1 as example), an adapter kit (1017-5), a multiple connector plate (1165-7) and a flow control (FCO) is shown below. This example is pictured at the left.

Model 1183-1 Multiple Connector Plate mounts to a manual valve (at position 2) of any pushbutton or rotary selector. Model 1183-1 provides additional mounting space for three (3) logic components. Any DYNAMCO "L" series relay, FCO (or FFC) flow control, ORO shuttle or VOO variable orifice can be mounted at any of these three (3) locations as required to satisfy the control requirement. Note the mounting location as shown on page 17 and that the flow paths of two (2) of the logic component stations have 10-32 UNF ports. All other ports are 1/16 barb connections.

Model 1242-1 mounts to the manual valves at both positions 1 and 2 of either pushbuttons or rotary selectors. Two (2) additional spaces are provided for other logic components as requried. Note mounting location on page 17 and that the flow paths for the logic component stations have 10-32 UNF ports. All other ports and 1/16 barb connections.

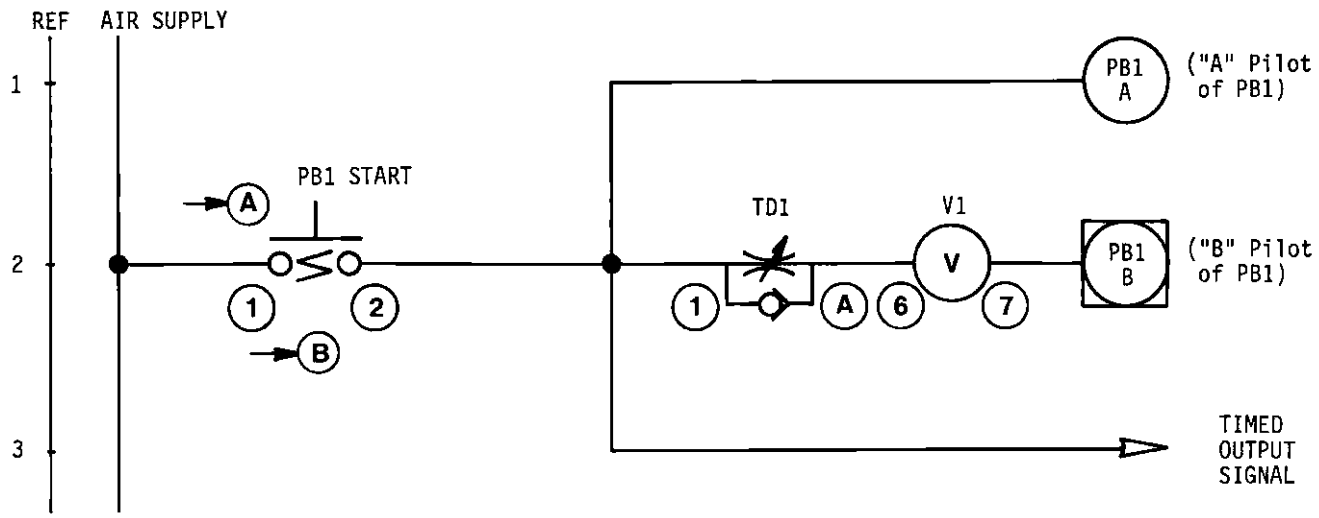

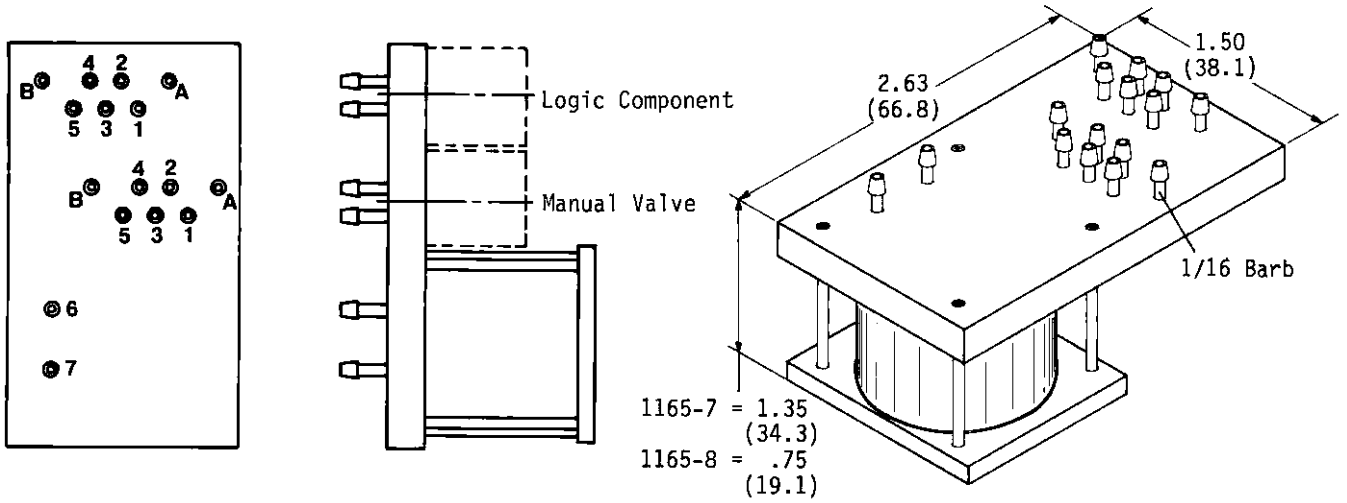

MODELS 1165-7 & 1165-8

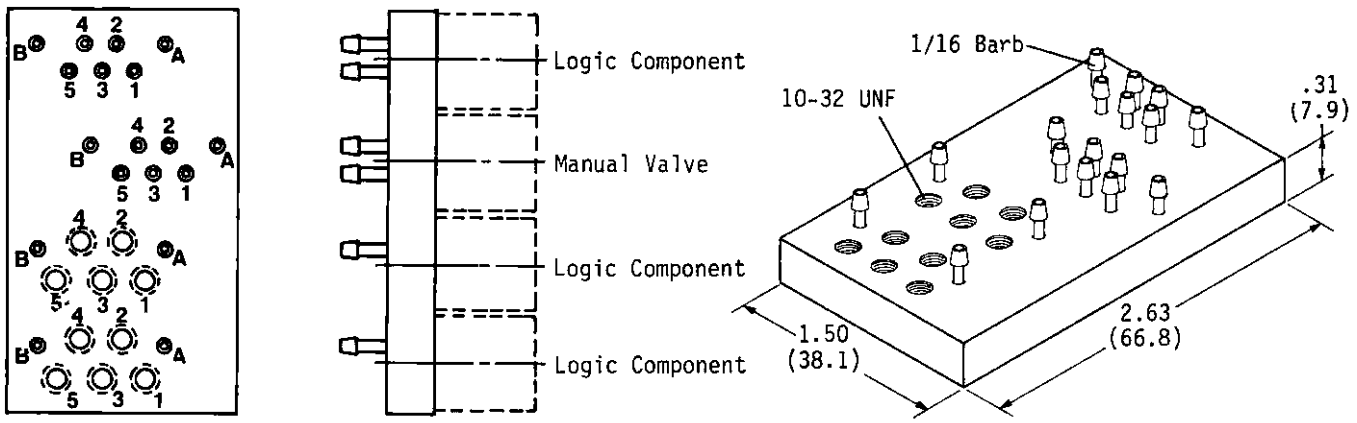

MODEL 1183-1

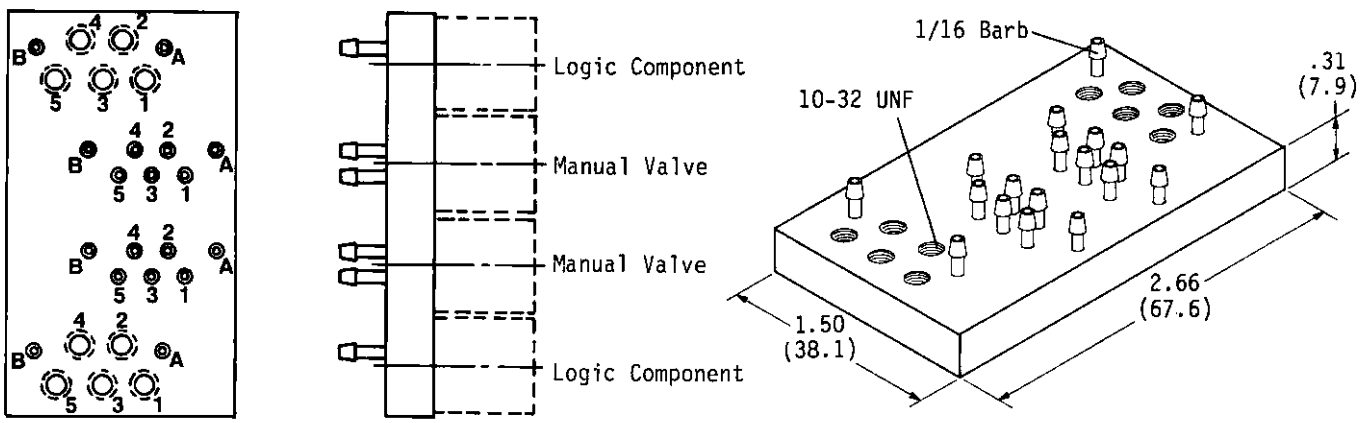

MODEL 1242-1

Dimensions in inches (mm)

Limit valves are used in industrial machines to signal the control system that a motion has taken place, that a part is in position or that a position-related action has been completed. Since most limit valves are located out on the machine where the action is, they are vulnerable to the environment in which they must function.

The DYNAMCO 3 "HDL" Series of limit valves have proven through the years to be tolerant of most industrial environments while retaining the reliability and the precision of the lapped spool relay valve along with features found in no other limit valve. The rugged case provides physical protection for the relay valve and its operating mechanism, while providing a convenient conduit connection for the protection of the interconnecting tubes and a standard mounting dimension to assure easy interchangeability. The limit valve shown here is Model HDL30 with a 301-1 lever operator which can be field adjusted to provide clockwise operation, counterclockwise operation or operation in both directions without special tools or additional parts. The operator head can also be rotated in 90° intervals with respect to the case to fit the application. A total of 17 different operator heads are available as shown on page 2. A complete list of lever operators for rotary head limits is shown on page 4.

The 4 way, 5 ported relay valve is mounted in the case so that visual verification of the actuation of the limit can be made to simplify initial cam-lever adjustments. Captive cover retaining screws are not lost when the cover is removed and a retaining chain keeps the cover with the case to assure accurate identification. These and other features make the DYNAMCO 3 "HDL" Series an industry-proven, precision and reliable limit valve.

The DYNAMCO 3 "SL" Series Sealed Limit shown on page 6 provides the same precision and reliable lapped spool operation as the "HDL" Series limit. The Sealed Limit gets its name from an incredibly small yet functional seal which protects the sliding portion of the actuating stem from the machine's environment. Other important features include: full 4 way 5 port valve function, rugged die cast levers with steel or plastic roller, choice of standard or optional low force spring, 1/16 barb base or high flow 10-32 base and a universal mounting bracket kit. See pages 6, 7 and 8 for additional details.

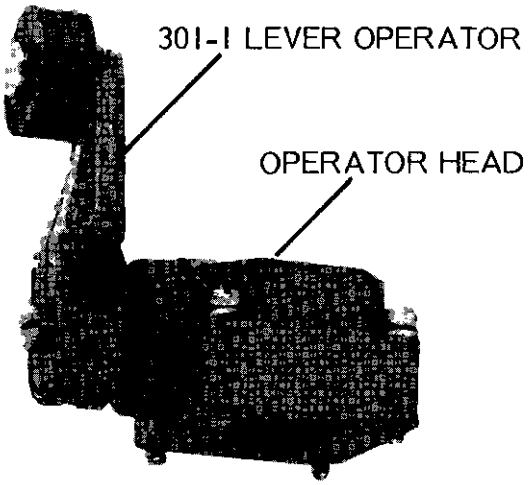

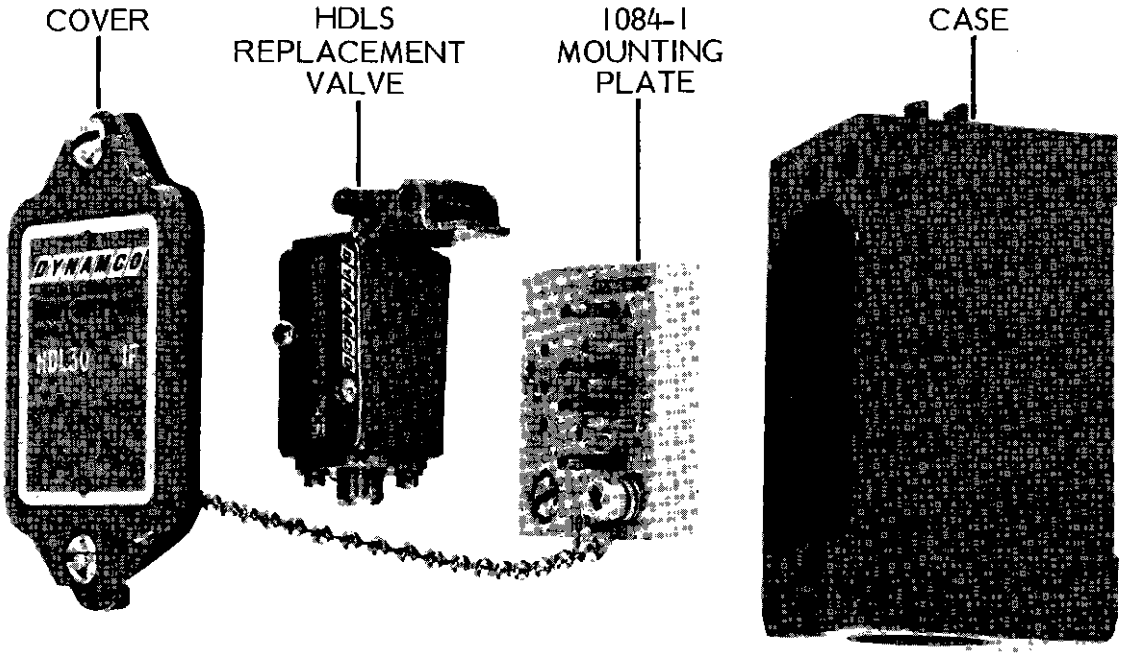

ROTARY HEAD-SIDE OPERATED
HDL28 Narrow Differential 5°

HDL30 Standard Construction

PUSHBUTTON - TOP OPERATED

HDL33 Adjustable

PUSHBUTTON - SIDE OPERATED

HDL35 Adjustable

PUSHROLLER - TOP OPERATED

HDL37 .75 Dia. Roller (19.1mm)

PUSHROLLER - SIDE OPERATED

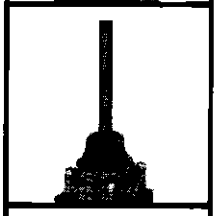

WOBBLE OPERATED
HDL42 Spring
HDL43 Stick - Nylon Rod
HDL44 Stick - Steel Wire

ROTARY HEAD - TOP OPERATED
HDL46 High Overtravel Rotary

OPERATING PRESSURE
50 psig (3.5 bar) Optimum Pressure
30 to 100 psig (2 to 7 bar) Maximum Range

TEMPERATURE RANGE
+32 to + 200°F (0 to +93°C) Maximum Range
Caution--At lower temperatures, the dew point of the air supply must be lower than the low operating temperature to prevent icing. At high temperatures, DYNAMCO polyurethane tubing is limited to 130°F at 50 psig.

SYMBOL
Independent Flowpaths

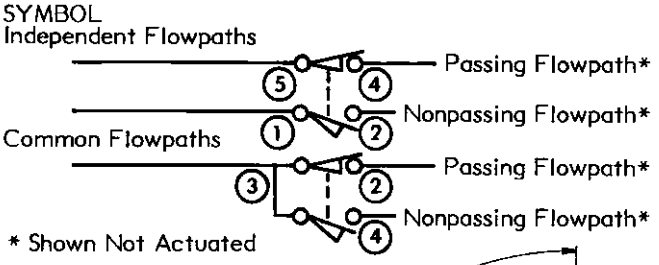

* Shown Not Actuated

OPERATING DATA

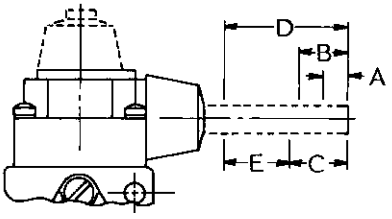

Push Operated Type

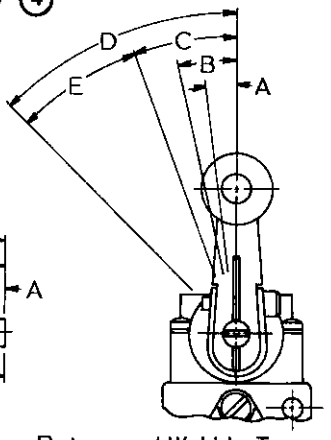

Rotary and Wobble Type

MODEL	A Operator Pre-Travel	B Operator Travel to Crack Valve	C Operator Travel for Full Valve Flow	D Operator Maximum Travel	E Operator Over Travel	TORQUE/FORCE Required for Full Valve Flow	TORQUE/FORCE Net to Return Operator
HDL28	4.0°	6.0°	7.0°	50.0°	43.0°	3.5 in·lb .40 N·m	0.5 in·lb .06 N·m
	15.0°	22.0°	27.0°	50.0°	23.0°	1.2 in·lb .14 N·m	0.5 in·lb .06 N·m
HDL30	8.0°	11.0°	12.0°	50.0°	38.0°	2.5 in·lb .28 N·m	0.5 in·lb .06 N·m
HDL32, 33, 37	.04 in 1.02 mm	.05 in 1.27 mm	.06 in 1.52 mm	.28 in 7.11 mm	.22 in 5.59 mm	2.0 lb 8.8 N	1.0 lb 4.4 N
HDL 35	.05 in 1.27 mm	.07 in 1.78 mm	.09 in 2.29 mm	.28 in 7.11 mm	.19 in 4.83 mm	3.0 lb 13.3 N	1.5 lb 6.7 N
HDL42	6.0°	10.0°	12.0°	15.0°	*	1.0 in·lb .11 N·m	0.2 in·lb .02 N·m
HDL43	6.0°	10.0°	12.0°	15.0°	*	1.5 in·lb .17 N·m	0.4 in·lb .05 N·m
HDL44 (End of wire)	10.0°	14.0°	18.0°	24.0°	*	1.0 in·lb .11 N·m	0.2 in·lb .02 N·m
(At center of wire)	6.0°	10.0°	12.0°	15.0°	*	1.0 in·lb .11 N·m	0.2 in·lb .02 N·m
HDL46	10.0°	16.0°	20.0°	120.0°	100.0°	1.5 in·lb .17 N·m	0.5 in·lb .06 N·m

* Over travel is provided only by the operator's ability to flex and return.

"HDL" DIMENSIONS

DYNAMCO

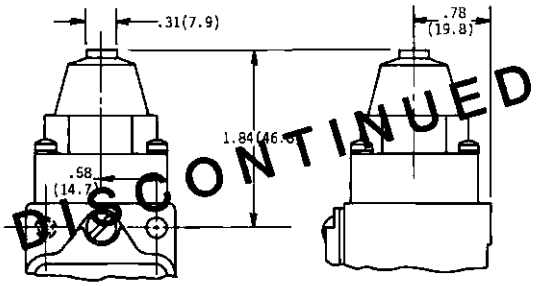

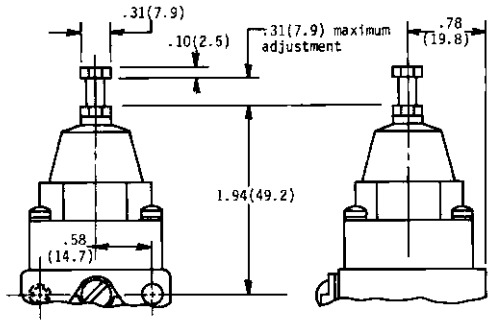

MODEL HDL33

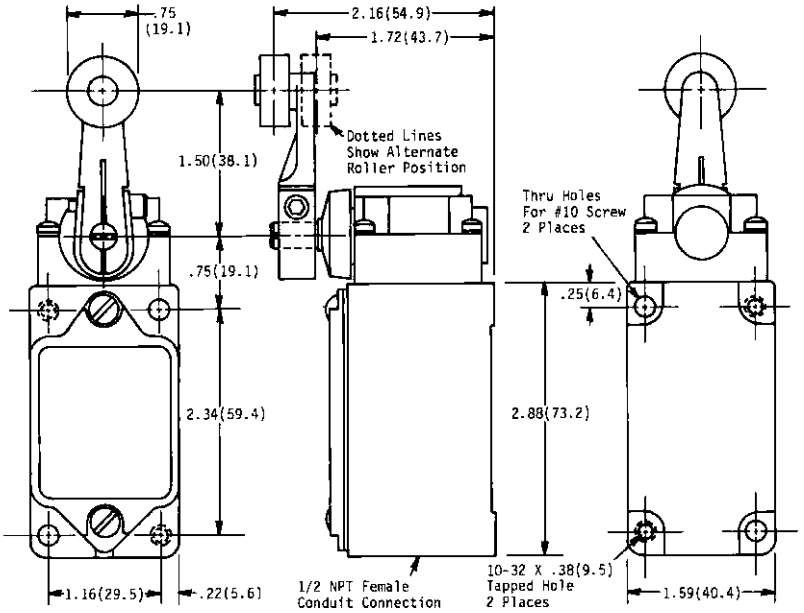

MODEL HDL28,
HDL30 with 301-1 Lever

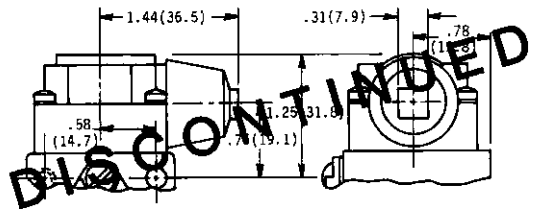

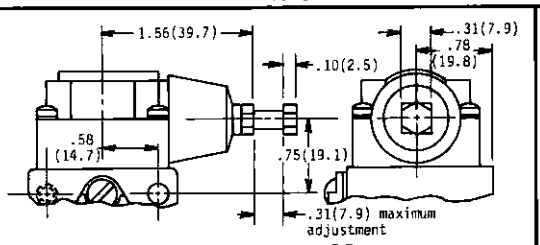

MODEL HDL35

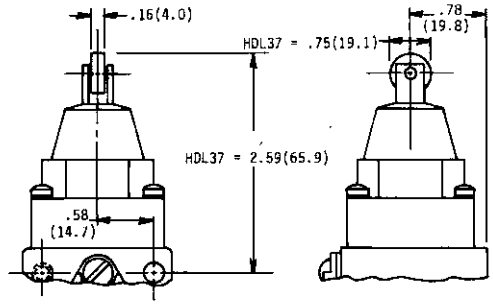

MODEL HDL37

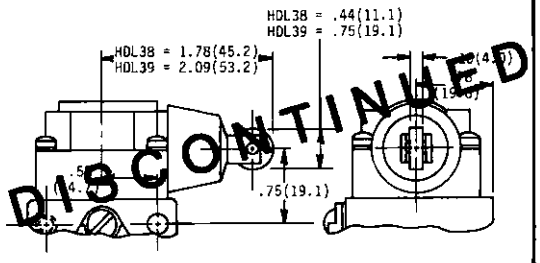

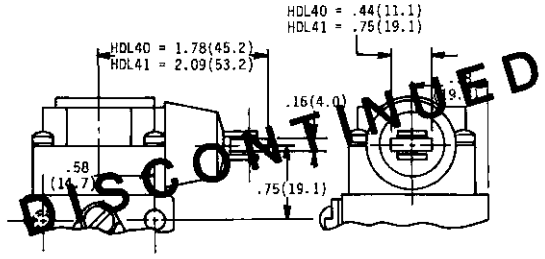

Dimensions in inches(mm)

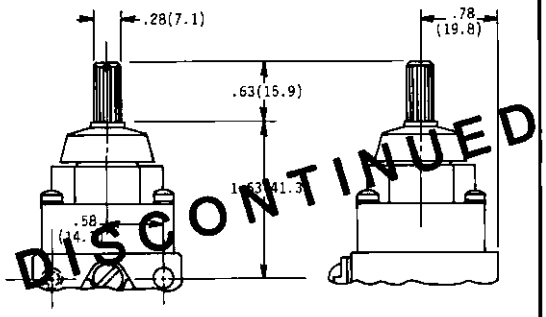

MODEL HDL46
Drawings Shown Half Size

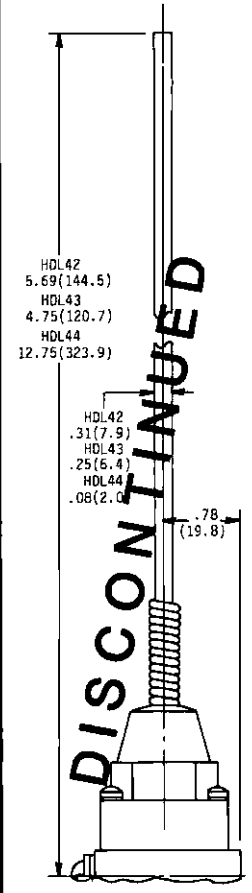

MODEL HDL42,
HDL43, HDL44

LEVER OPERATORS
Drawings Shown Half Size
Dimensions in inches(mm)

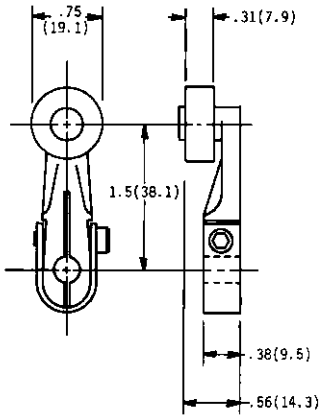

301-1 STEEL
301-2 NYLON

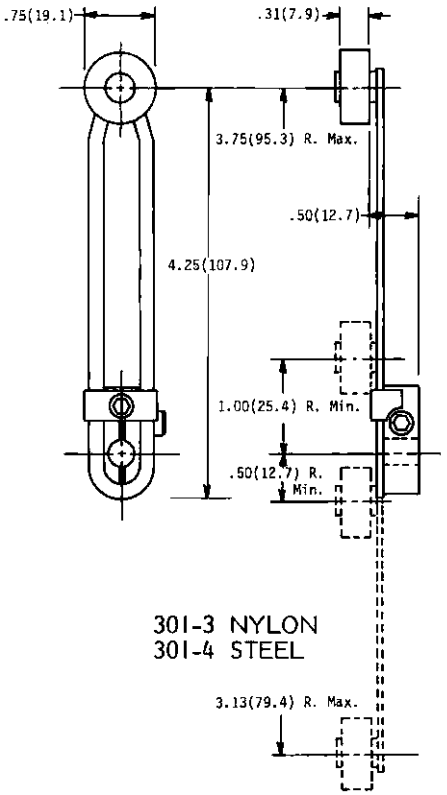

301-3 NYLON
301-4 STEEL

LIMIT VALVE MODEL NUMBER	OPERATOR HEAD PART NUMBER
HDL28	310-0
HDL30	309-1
HDL33	309-4
HDL35	309-6
HDL37	309-8
HDL42	310-3
HDL43	310-4
HDL44	310-5
HDL46	310-7
SL11_ _	1467-1
SL12_ _	1468-1
SL13_ _	1470-1
SL14_ _	1471-1
SL15_ _	1472-1

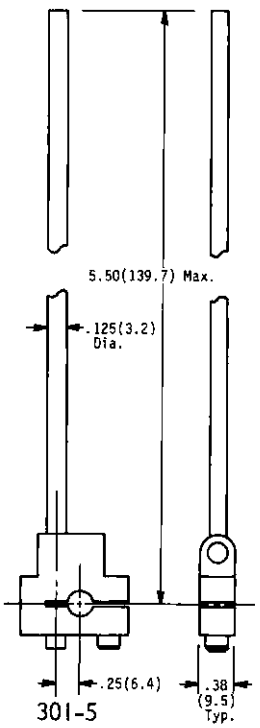

301-5
ROD

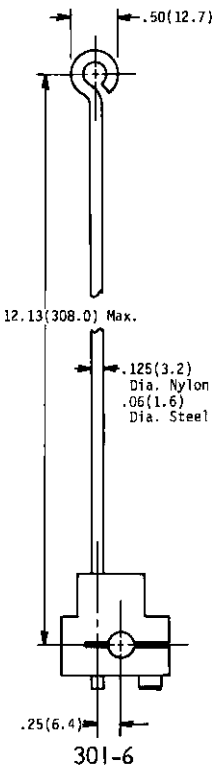

301-6
WIRE

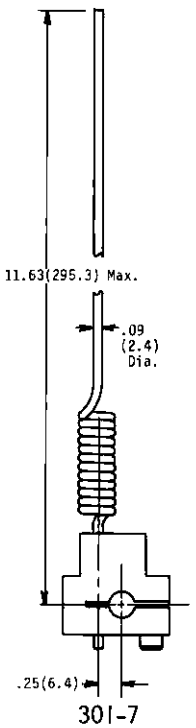

301-7
SPRING

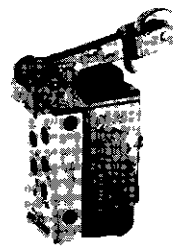
SL1112

STEEL ROLLER LEVER OPERATOR
STANDARD FORCE RETURN SPRING
Operating Force 8 oz
SL1110, No Base
SL1111, 1/16 Barb Base
SL1112, 10-32 UNF Base
LOW FORCE RETURN SPRING
Operating Force 4 oz
SL1120, No Base
SL1121, 1/16 Barb Base
SL1122, 10-32 UNF Base

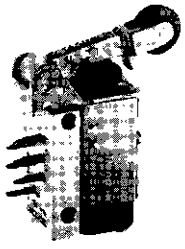
SL1211

NYLON ROLLER LEVER OPERATOR
STANDARD FORCE RETURN SPRING
Operating Force 8 oz
SL1210, No Base
SL1211, 1/16 Barb Base
SL1212, 10-32 UNF Base
LOW FORCE RETURN SPRING
Operating Force 4 oz
SL1220, No Base
SL1221, 1/16 Barb Base
SL1222, 10-32 UNF Base

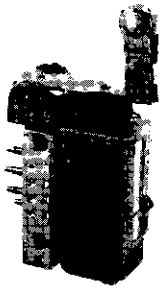
SL1311

ONE WAY ROLLER LEVER OPERATOR
STANDARD FORCE RETURN SPRING
Operating Force 10 oz
SL1310, No Base
SL1311, 1/16 Barb Base
SL1312, 10-32 UNF Base
LOW FORCE RETURN SPRING
Operating Force 5 oz
SL1320, No Base
SL1321, 1/16 Barb Base
SL1322, 10-32 UNF Base

DISCONTINUED


SL1411

FLAT LEVER OPERATOR
STANDARD FORCE RETURN SPRING
Operating Force 4 oz
SL1410, No Base
SL1411, 1/16 Barb Base
SL1412, 10-32 UNF Base
LOW FORCE RETURN SPRING
Operating Force 2 oz
SL1420, No Base
SL1421, 1/16 Barb Base
SL1422, 10-32 UNF Base

DISCONTINUED


SL1511

MECHANICAL STEM OPERATOR
STANDARD FORCE RETURN SPRING
Operating Force 15 oz
SL1510, No Base
SL1511, 1/16 Barb Base
SL1512, 10-32 UNF Base
LOW FORCE RETURN SPRING
Operating Force 8 oz
SL1520, No Base
SL1521, 1/16 Barb Base
SL1522, 10-32 UNF Base

OPERATING PRESSURE
50 psig (3.5 bar) Optimum Pressure
30 to 100 psig (2 to 7 bar) Maximum Range

TEMPERATURE RANGE
+32 to + 200°F (0 to +93°C) Maximum
Caution—At lower temperatures, the dew point of the air supply must be lower than the low operating temperature to prevent icing. At high temperatures, DYNAMCO polyurethane tubing is limited to 130°F at 50 psig.

SYMBOL
Independent Flowpaths

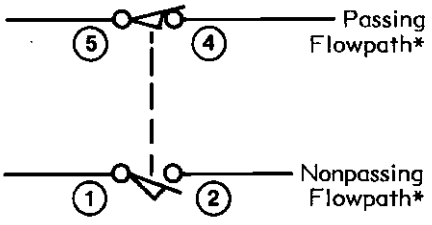

Common Flowpaths

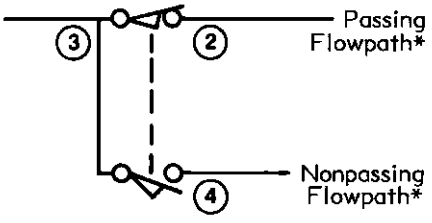

* Shown Not Actuated

OPERATING DATA

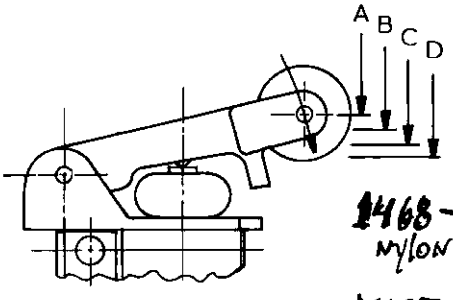

1468-1
NYLON ARM ASSY.

1467-1
STEEL

A = Initial Position
B = Position to Crack Valve
C = Position to Full Flow
D = Maximum Travel Position

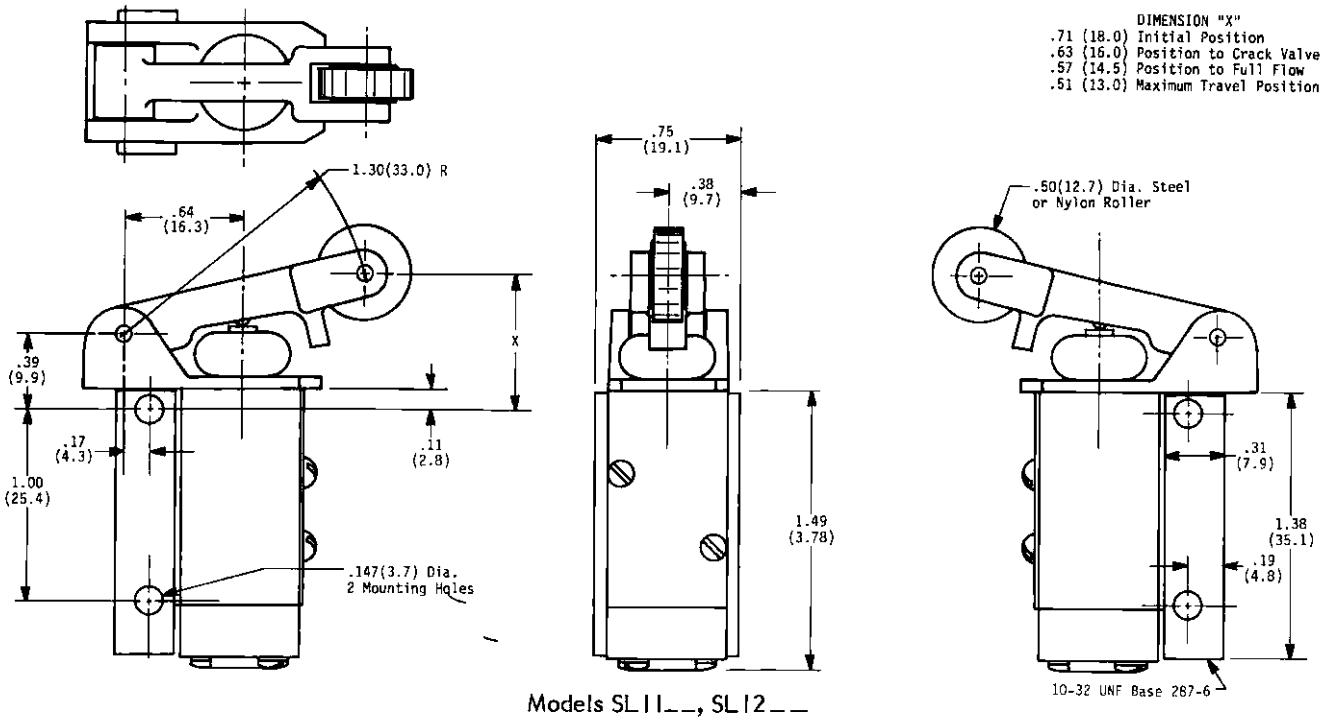

Models SL11__, SL12__

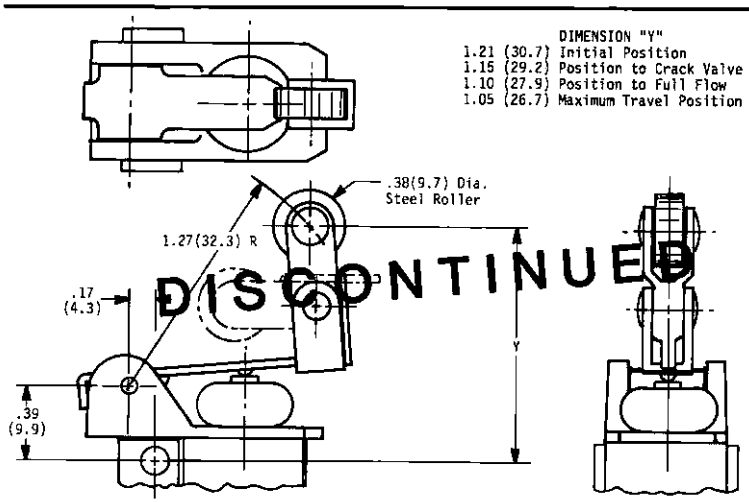

Model SL13__

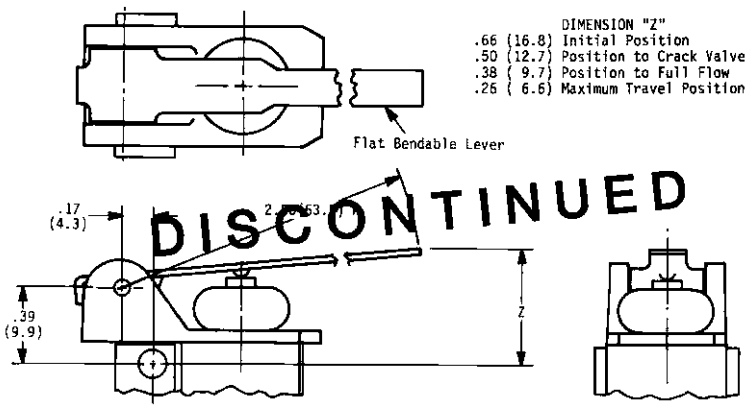

Model SL14__

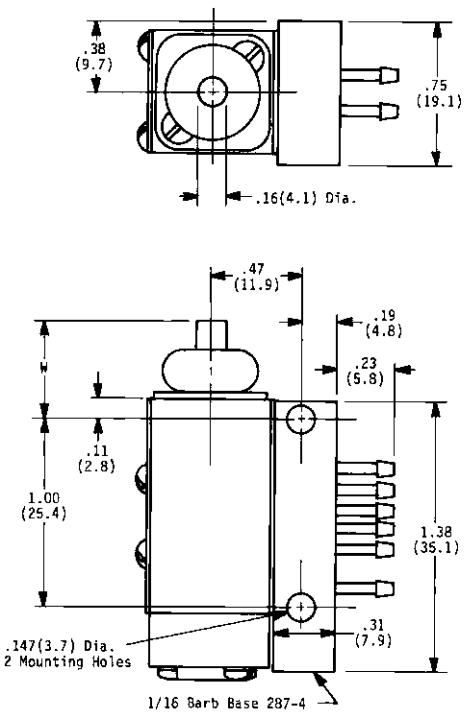

Model SL15__

Drawings Shown Full Size
Dimensions in inches(mm)

"SL" MOUNTING KIT AND TUBE ENCLOSURE

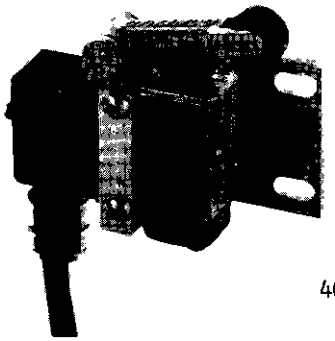

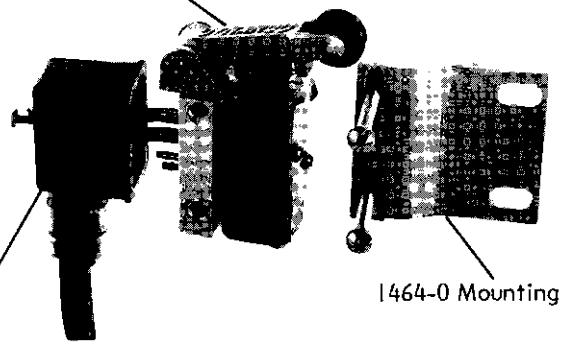

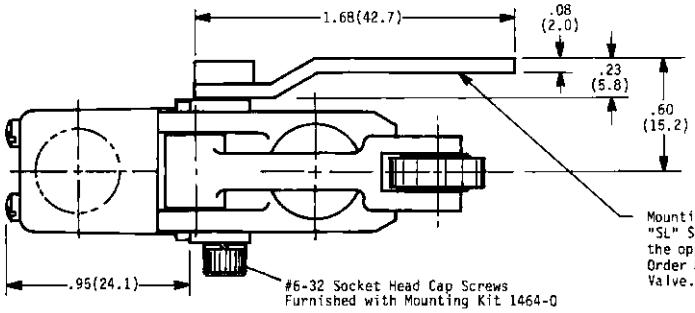

Mounting Kit 1464-0 provides convenient X-Y adjustment for "SL" Series Limit Valves. Mounting Kit may be repositioned on the opposite side of valve or rotated 180° from position shown. Order Mounting Kit separately, not furnished as a part of Limit Valve.

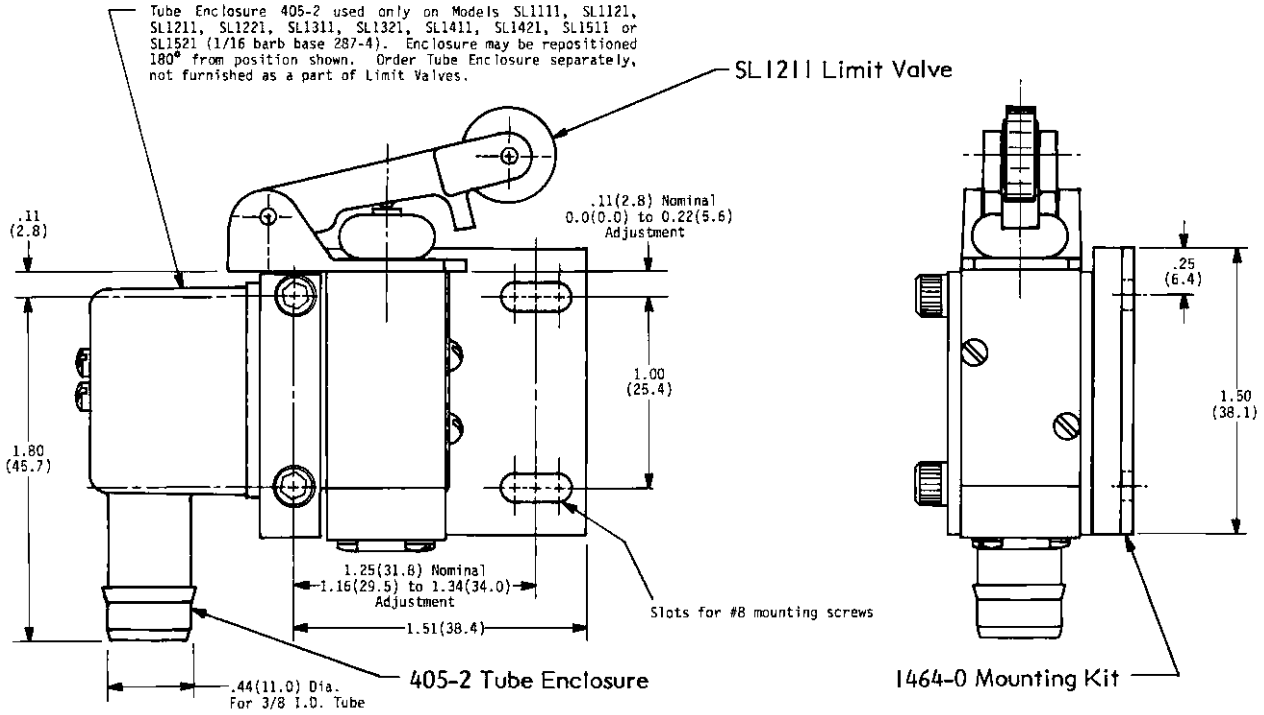

Dimensions in inches(mm)

DYNAMCO

DYNAMCO 3 also introduces a new concept in air logic components, a Multi-flow-path relay - a relay similar to the 4 way 5 ported "Super" relays except the Multi-flow-path relay has three (3) totally independent flow paths. Each flow path, being totally independent, may be connected either passing or nonpassing as required to satisfy the circuit requirements. This new Multi-flow-path relay provides the added flexibility and capability to solve complex design problems within a single relay. The Multi-flow-path relay is available detented or spring returned, with a 1/16 barbed base plate that fits the standard DYNAMCO component mounting panels.

DYNAMCO 3 relays are manufactured differently. The relay spool is made of hardened stainless, and the body is plated with electroless nickel. Each spool and body is tested to assure that the spool will shift with an air pilot pressure of 1 psig or less and that the leakage is no greater than .002 SCFM when supplied with 50 psig. Once these tests are met, the spool is cycled in its body for 1,000,000 cycles, and then tested again for the same shifting force and leakage rate (there is no danger of wearing the DYNAMCO 3 relay since its life expectancy is 100,000,000 cycles). When a spool and body has successfully met all these tests, it is assembled into its final configuration as a relay, and then tested for its functional characteristics. Then and only then is a relay ready for shipment to you.

With equal care DYNAMCO also manufactures shuttle valves, flow controls, volume chambers and all of the other components that go into a complete air logic system. The relays, shuttle valves and flow controls are sub-base mounted. Once installed they can be removed without disconnecting a single line.

Interconnection of DYNAMCO 3 logic components is simplified with push on tubing and barb connectors. No tubing inserts, ferrules, collars, seals or threads are required with a DYNAMCO barb and tube system. No guessing if the tube is properly connected or properly sealed. The barb is always clearly visible inside the crystal clear polyurethane tube.

DYNAMCO 3 is truly a third generation of air control devices incorporating features found in no other air logic control system.

TABLE OF CONTENTS

RELAYS, 4 WAY, 5 PORT

Air piloted relay valves are the heart of all air logic control systems. They are used to provide many different functions such as switching, memory, sensing and for amplification of signals. The operation of a relay valve is the same as the valves commonly used to supply fluid pressure to cylinders, motors and other power devices. The relay, however, is used only to pilot the power valve. Its output or flow capacity is just a fraction of that needed to operate most power devices. Relays are available in three different styles: spring return, detented and free floating spool. The function of the relays used in a control circuit is to provide changeable passageways for air control signals to activate the power devices in a predictable and preplanned order.

SPRING RETURN RELAYS

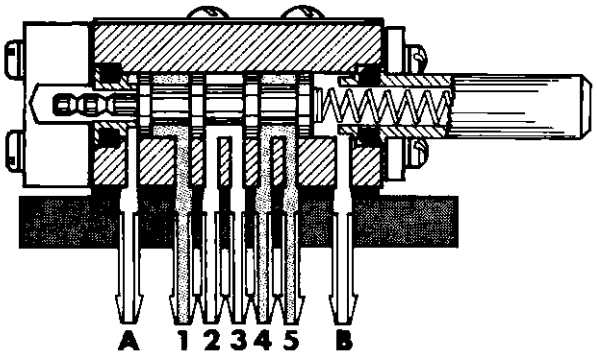

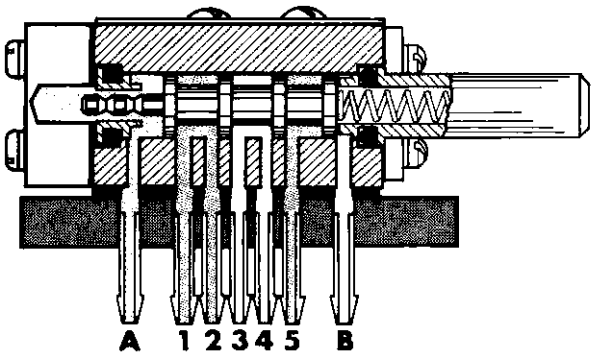

Pictured above is a spring return, air piloted relay valve. The air pilot ports "A" and "B" are located on either end of the spool. Ports "1" through "5" are the flow passageways of the relay. These flow passageways are either blocked (nonpassing) or connected to another port (passing), depending on the position of the spool. Without a pilot pressure at port "A", the spring holds the spool in the position shown. This is referred to as the "B" position, or the normal position, of the spool. When the spool is in the "B" position a control signal at port "1" will be blocked (nonpassing), while the signal at port "5" will be connected to port "4" (passing). As long as the spool remains in the "B" position, ports "1" to "2" will be nonpassing, and ports "5" to "4" will be passing. When an air pilot signal is applied to port "A", the spool moves to the right, compressing the spring. As shown in the right view, this changes the conditions of the flow passageways. This new position is referred to as spool position "A", or the alternate position. In the "A" position, ports "1" to "2" are passing, and ports "5" to "4" are nonpassing. Port 3 is a common exhaust port exhausting port "2" when the spool is in the "B" position and exhausting port "4" when the spool is in the "A" position.

Relays may also be used in a circuit with a common input or supply connected to port "3". The flow path from port "3" to port "2" would be passing as long as the spool is in the normal "B" position. When a pilot signal is present at port "A" the spool shifts to the alternate "A" position, and port "3" to port "4" becomes passing.

DETENTED RELAYS

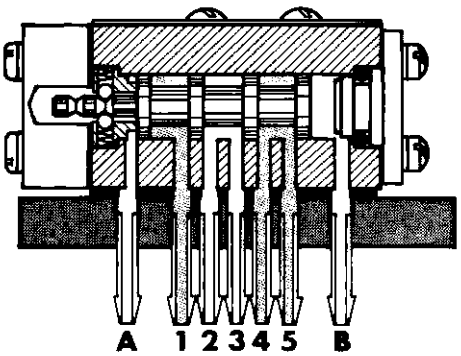

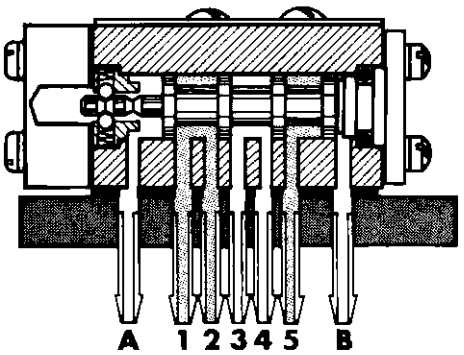

The detented relay is similar to the spring return relay except it does not have a spring forcing the spool into its normal "B" position, but it does have a detent which firmly holds the spool in either "B" position or "A" position. When a pilot pressure (greater than the detenting force) is present at port "B" (and port "A" is exhausted) the spool moves to the normal "B" position. If the pilot pressure is removed from port "B" the spool remains in the "B" position, being held in this position by the detent. When a pilot pressure is present at port "A" (and port "B" is exhausted) the spool moves to the alternate "A" position and, being held by the detent, will remain in this position when the pilot pressure at port "A" is removed. When the spool is in the "B" position the flow path "1" to "2" is blocked (nonpassing), and the flow path "5" to "4" is connected (passing).

MULTI-FLOW-PATH RELAYS

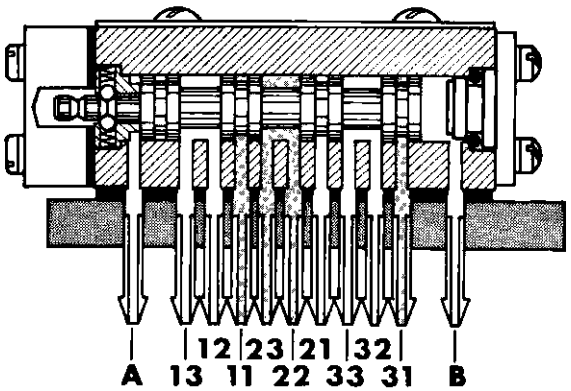

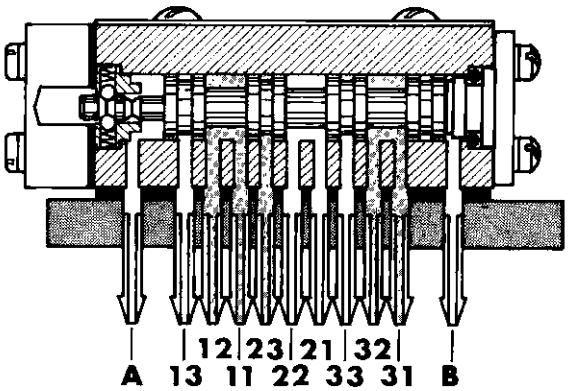

The Multi-flow-path relay is available with the spool either spring returned or detented. When the spool is in its normal "B" position (left view) ports 12, 22 and 32 are the output ports. Port 11 is the nonpassing input for output port 12. Port 21 is the nonpassing input for output port 22, and port 31 is the nonpassing input for output port 32. Ports 13, 23 and 33 are passing input ports for their respective output ports 12, 22 and 32. Any combination of passing and nonpassing flow paths may be used; however, only one input port may be used per output port (12, 22, 32). Note, the unused input port provides the exhaust for its flow path. When the spool moves to its alternate "A" position, all flow paths that were passing in the normal "B" position are now nonpassing, and those that were nonpassing in the normal "B" position are now passing. In the normal "B" position (left view), flow paths 11 to 12 and 31 to 32 are nonpassing, and flow path 23 to 22 is passing. When the spool moves to the "A" position (right view) flow paths 11 to 12 and 31 to 32 become passing and flow path 23 to 22 becomes nonpassing.

SHUTTLE VALVES

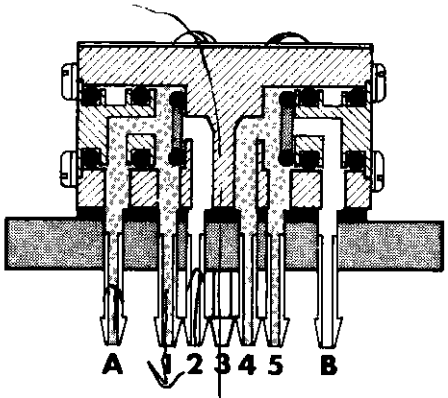

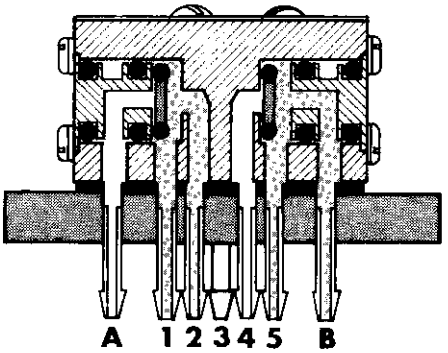

The shuttle valve is used in air air logic system to direct the flow from either of two signal sources to a common output, without permitting the signal pressure to exhaust through the other signal line. A shuttle valve consists of two input ports and one output port. A pressure signal at either input will flow through to the output and block off the other input port. DYNAMCO's shuttle valve (shown above) is actually two shuttles built into the same body. A signal at port "A" will provide an output at port "1" (shown in the left view). A signal at port "2" will also provide a signal at port "1" (shown in the right view). Note port "3" is not used in the shuttle valves. An input signal at port "4" or at port "B" will provide an output signal at port "5".

FLOW CONTROLS

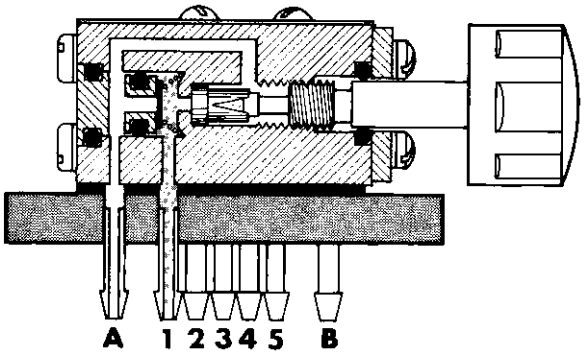

The flow control, used in timing circuits, consists of a variable orifice for restricting the flow of air in one direction and a by-pass check valve for free flow in the opposite direction. A pressure signal at port "1" closes the by-pass check valve and directs the pressure through the variable orifice to port "A". This restricted pressure at port "A", through a volume chamber, gradually increases until it is sensed by a time delay relay. When the signal at port "1" is exhausted, the pressure downstream of the orifice is exhausted back through the by-pass check valve to port "1". The by-pass check valve minimizes the time required to reset the timing system. See page 15 for typical time delay circuits.

DETENTED RELAYS "LDA" SERIES

DYNAMCO

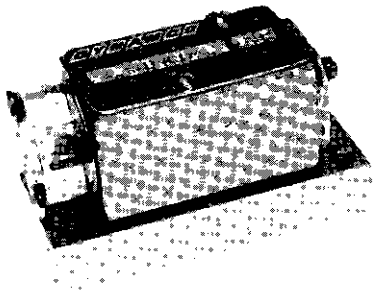

LDA4

MODEL LDA * Detented, 4 Way, 5 Port Relays
- * 0 - Without Baseplate
- 1 - 1/16 Barb Baseplate, Bot. Ports
- 2 - 1/16 Barb Baseplate, Side Ports
- 4 - 10-32 UNF Baseplate, Bot. Ports
- 5 - 10-32 UNF Baseplate, Side Ports

SPECIFICATIONS
Model LDAO furnished with gasket and mounting screws. Other models furnished mounted to baseplate.

OPERATING PRESSURE
50 psig (3.5 bar) Optimum Pressure
30 to 100 psig (2 to 7 bar) Maximum Range

PILOT PRESSURE
12 psig (.08 bar) required at either pilot "A" or pilot "B" to shift spool.

TEMPERATURE RANGE
+32 to +200°F (0 to +93°C) Maximum Range
Caution--At lower temperatures, the dew point of the air supply must be lower than the low operating temperature to prevent icing. At high temperatures, DYNAMCO polyurethane tubing is limited to 130° at 50 psig.

RESPONSE TIME
3 milliseconds at 50 psig (3.5 bar)

SYMBOL

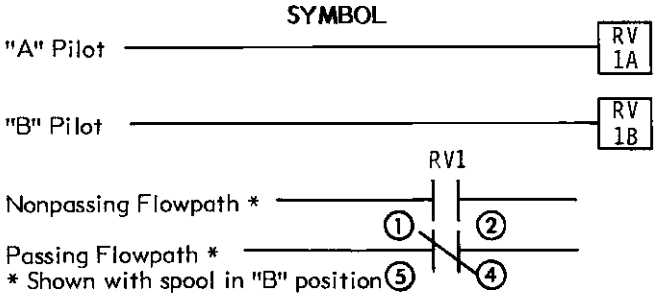

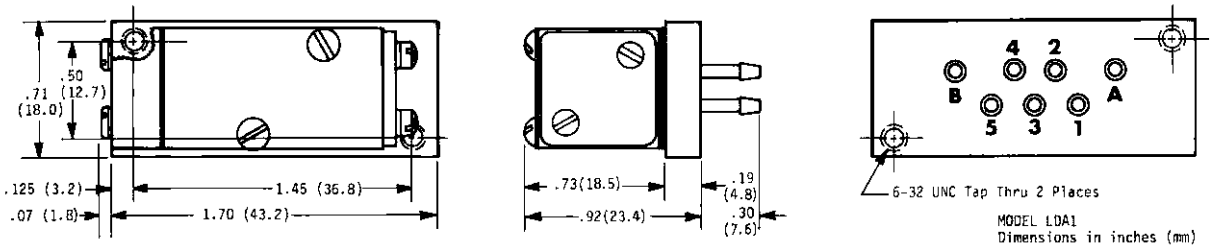

MODEL LDA1
Dimensions in inches (mm)

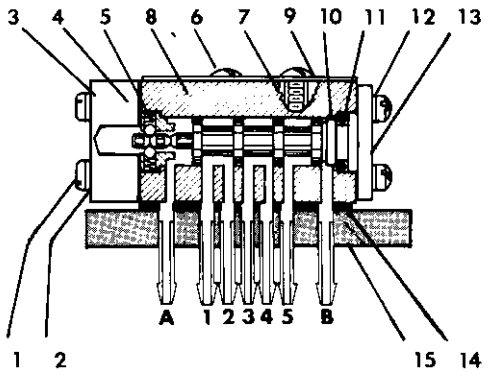

LDA1

ITEM	PART NO.	DESCRIPTION	MODELS	NO. REQD.
1	628-6	Screw	LDA*	2
2	820-1	Lockwasher	LDA*	4
3	204-1	Window	LDA*	1
4	215-1	Gasket	LDA*	1
5	283-2	Detent Assy.	LDA*	1
6	632-1	Screw	LDA*	2
7	424-1	Screw Retainer	LDA*	2
8	426-2	Body & Spool Assy.	LDA*	1
9	1180-3	Nameplate	LDA*	1
10	908-1	"O" Ring	LDA*	1
11	109-1	Spool Stop	LDA*	1
12	624-6	Screw	LDA*	2
13	110-2	End Plate	LDA*	1
14	197-1	Gasket	LDA*	1
15	187-2	Base 1/16 Bot.	LDA1	1
	189-2	Base 1/16 Side	LDA2	1
	1167-1	Base 10-32 Bot.	LDA4	1
	1173-1	Base 10-32 Side	LDA5	1

MODEL LSA * Free Floating Spool, 4 Way, 5 Port
- * 0 - Without Baseplate
- 1 - 1/16 Barb Baseplate, Bot. Ports
- 2 - 1/16 Barb Baseplate, Side Ports
- 4 - 10-32 UNF Baseplate, Bot. Ports
- 5 - 10-32 UNF Baseplate, Side Ports

SPECIFICATIONS
Model LSAO furnished with gasket and mounting screws. Other models furnished mounted to baseplate.

OPERATING PRESSURE
50 psig (3.5 bar) Optimum Pressure
30 to 100 psig (2 to 7 bar) Maximum Range

PILOT PRESSURE
1 psig (0.07 bar) required at either pilot "A" or pilot "B" to shift spool. Caution—Pilot "A" or pilot "B" should be pressurized at all times.

TEMPERATURE RANGE
+32° to +200°F (0 to +93°C) Maximum Range
See Page 6 for details concerning low and high temperature operation.

RESPONSE TIME
3 milliseconds of 50 psig (3.5 bar)

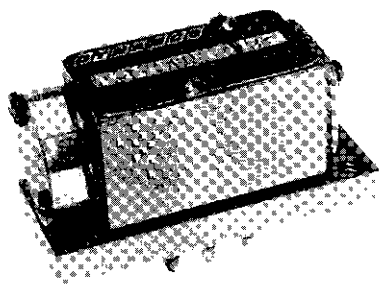

LSA1

SYMBOL

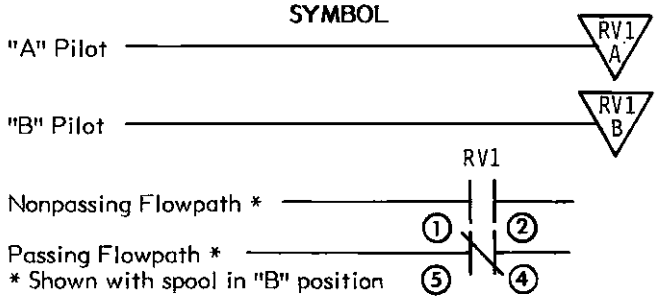

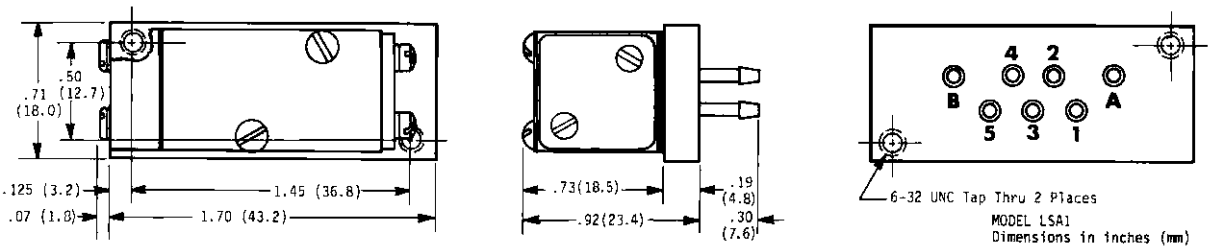

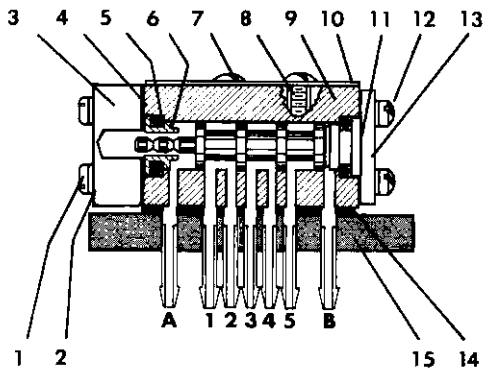

LSA1

ITEM	PART NO.	DESCRIPTION	MODELS	NO. REQD.
1	628-6	Screw	LSA*	2
2	820-1	Lockwasher	LSA*	4
3	204-1	Window	LSA*	1
4	215-1	Gasket	LSA*	1
5	908-1	"O" Ring	LSA*	2
6	130-1	Spool Stop	LSA*	1
7	632-1	Screw	LSA*	2
8	424-1	Screw Retainer	LSA*	2
9	426-2	Body & Spool Assy.	LSA*	1
10	1180-4	Nameplate	LSA*	1
11	109-1	Spool Stop	LSA*	1
12	624-6	Screw	LSA*	2
13	110-2	End Plate	LSA*	1
14	197-1	Gasket	LSA*	1
15	187-2	Base 1/16 Bot.	LSA1	1
	189-2	Base 1/16 Side	LSA2	1
	1167-1	Base 10-32 Bot.	LSA4	1
	1173-1	Base 10-32 Side	LSA5	1

SPRING RETURN RELAYS "LSH" AND "LSF" SERIES

DYNAMCO

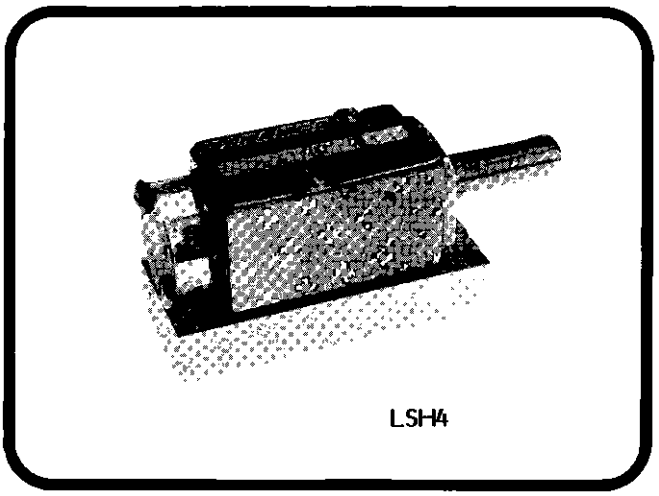

LSH4

MODEL LSH * Spring Return (25 psig), 4 Way, 5 Port
MODEL LSF * Spring Return (8 psig), 4 Way, 5 Port

* 0 - Without Baseplate
1 - 1/16 Barb Baseplate, Bot. Ports
2 - 1/16 Barb Baseplate, Side Ports
4 - 10-32 UNF Baseplate, Bot. Ports
5 - 10-32 UNF Baseplate, Side Ports

SPECIFICATIONS
Models LSHO and LSFO furnished with gasket and mounting screws. Other models furnished mounted to baseplate.

OPERATING PRESSURE
50 psig (3.5 bar) Optimum Pressure
30 to 100 psig (2 to 7 bar) Maximum Range

PILOT PRESSURE (to shift spool)
LSH * - 25 psig (1.7 bar) required at pilot "A"
LSF * - 8 psig (0.6 bar) required at pilot "A"

TEMPERATURE RANGE
+32° to +200°F (0 to +93°C) Maximum Range
See Page 6 for details concerning low and high temperature operation.

RESPONSE TIME
3 milliseconds at 50 psig (3.5 bar)

SYMBOL

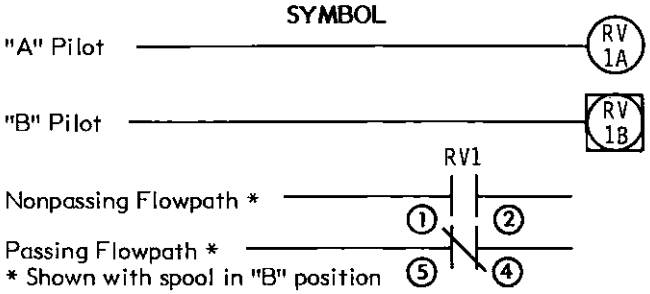

* Shown with spool in "B" position

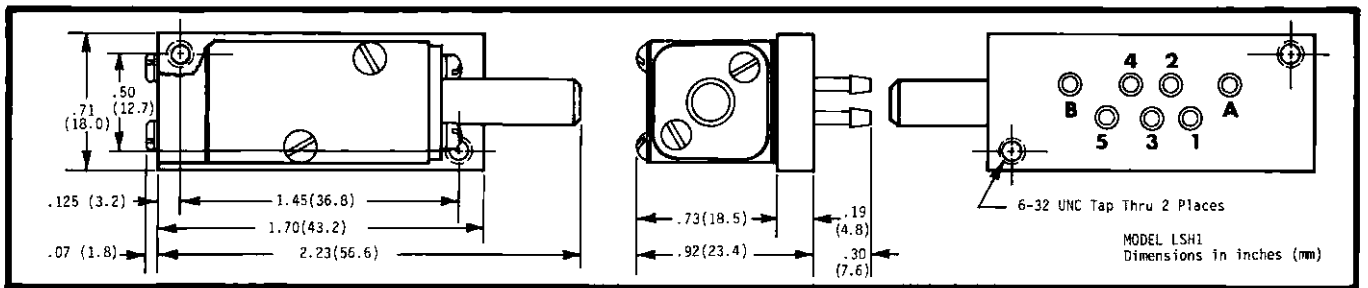

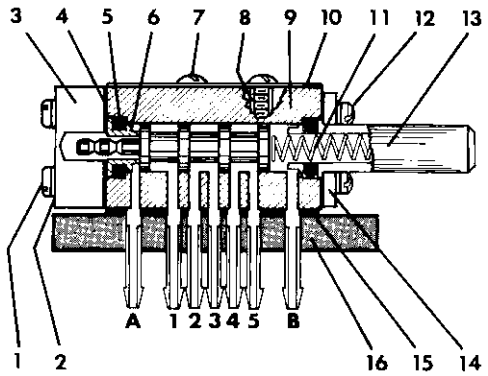

LSH1

ITEM	PART NO.	DESCRIPTION	MODELS	NO. REQD.
1	628-6	Screw	LSH*, LSF*	2
2	820-1	Lockwashers	LSH*, LSF*	4
3	204-1	Window	LSH*, LSF*	1
4	215-1	Gasket	LSH*, LSF*	1
5	908-1	"O" Ring	LSH*, LSF*	2
6	130-1	Spool Stop	LSH*, LSF*	1
7	632-1	Screw	LSH*, LSF*	2
8	424-1	Screw Retainer	LSH*, LSF*	2
9	426-2	Body & Spool Assy.	LSH*, LSF*	1
10	1180-1	Nameplate	LSH*	1
	1180-2	Nameplate	LSF*	1
11	167-1	Spring(25 psig)	LSH*	1
	214-1	Spring (8 psig)	LSF*	1
12	624-6	Screw	LSH*, LSF*	2
13	199-1	Spool Stop	LSH*, LSF*	1
14	110-3	End Plate	LSH*, LSF*	1
15	197-1	Gasket	LSH*, LSF*	1
16	187-2	Base 1/16 Bot.	LSH1, LSF1	1
	189-2	Base 1/16 Side	LSH2, LSF2	1
	1167-1	Base 10-32 Bot.	LSH4, LSF4	1
	1173-1	Base 10-32 Side	LSH5, LSF5	1

MODEL OR * Shuttle Valve
- * 0 - Without Baseplate
- 1 - 1/16 Barb Baseplate, Bot. Ports
- 2 - 1/16 Barb Baseplate, Side Ports
- 4 - 10-32 UNF Baseplate, Bot. Ports
- 5 - 10-32 UNF Baseplate, Side Ports

SPECIFICATIONS
Model ORO furnished with gasket and mounting screws. Other models furnished mounted to baseplate.

OPERATING PRESSURE
50 psig (3.5 bar) Optimum Pressure
30 to 100 psig (2 to 7 bar) Maximum Range

TEMPERATURE RANGE
+32° to +200°F (0 to +93°C) Maximum Range
See Page 6 for details concerning low and high temperature operation.

OPERATING CHARACTERISTICS
Model OR_* contains two (2) totally independent shuttle valves. Each shuttle has an output port and two input ports. The output port 1 has as its inputs ports A and 2. Output port 5 has as its inputs ports B and 4.

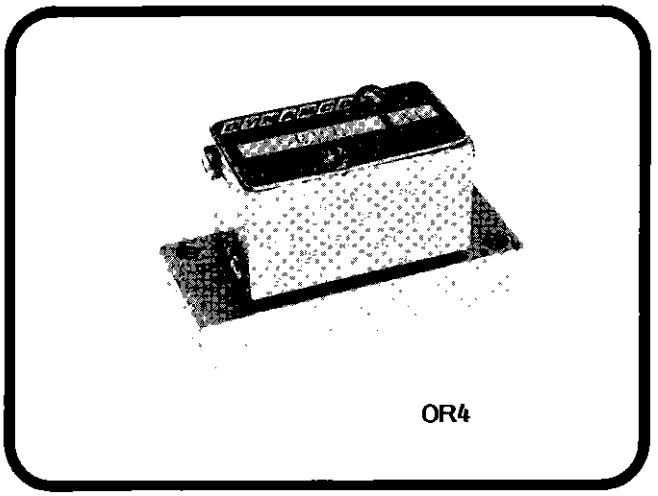

OR4

SYMBOL

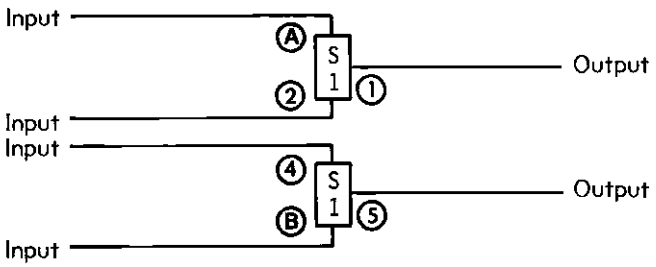

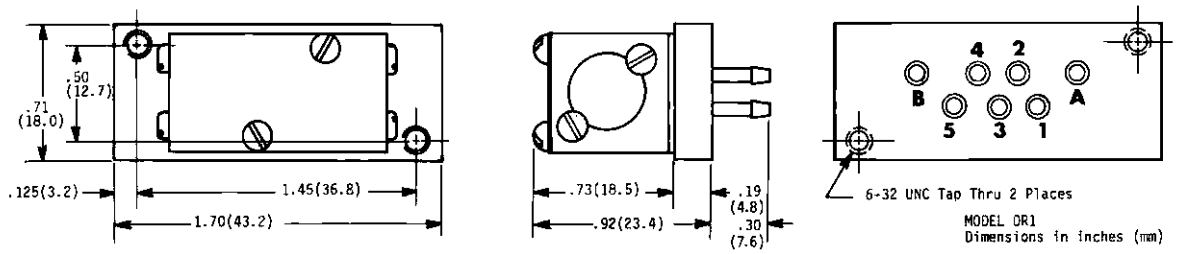

MODEL OR1
Dimensions in inches (mm)

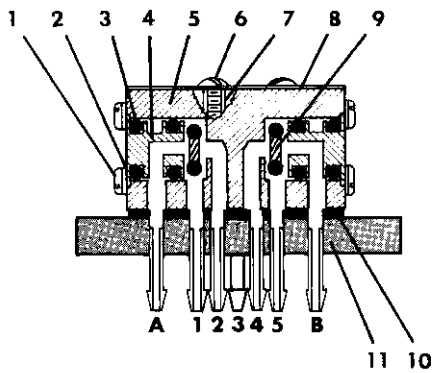

OR1

ITEM	PART NO.	DESCRIPTION	MODELS	NO. REQD.
1	623-3	Screw	OR*	4
2	820-1	Lockwasher	OR*	4
3	908-1	"O" Ring	OR*	4
4	1250-1	End Plug	OR*	2
5	1249-1	Body	OR*	1
6	632-1	Screw	OR*	2
7	424-1	Screw Retainer	OR*	2
8	1181-3	Nameplate	OR*	1
9	1254-2	Shuttle Assy.	OR*	2
10	197-1	Gasket	OR*	1
11	187-2	Base 1/16 Bot.	OR1	1
	189-2	Base 1/16 Side	OR2	1
	1167-1	Base 10-32 Bot.	OR4	1
	1173-1	Base 10-32 Side	OR5	1

MULTI-FLOW-PATH RELAYS "MDA" SERIES - DETENTED

DYNAMCO

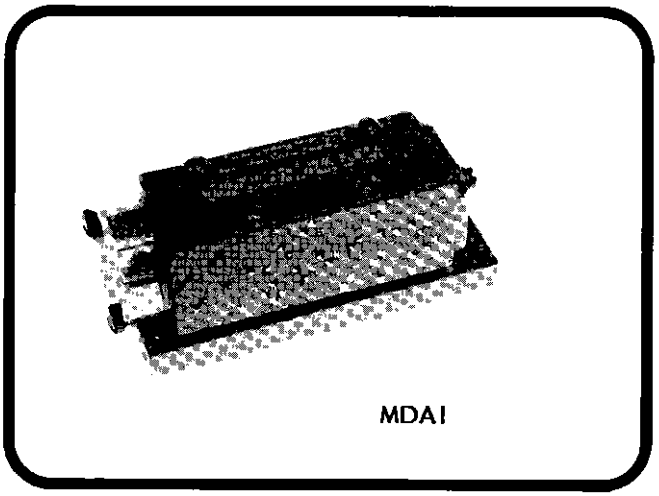

MDA1

MODEL MDA * Detented Multi-flow-path
- * 0 - Without Baseplate
- 1 - 1/16 Barb Baseplate, Bot. Ports
- 2 - 1/16 Barb Baseplate, Side Ports

SPECIFICATIONS
Model MDAO furnished with gasket and mounting screws. Other models furnished mounted to baseplate.

OPERATING PRESSURE
50 psig (3.5 bar) Optimum Pressure
30 to 100 psig (2 to 7 bar) Maximum Range

PILOT PRESSURE
12 psig (0.8 bar) required at either pilot "A" or pilot "B" to shift spool.

TEMPERATURE RANGE
+32° to +200°F (0 to +93°C) Maximum Range
See Page 6 for details concerning low and high temperature operation.

RESPONSE TIME
3 milliseconds at 50 psig (3.5 bar)

SYMBOL

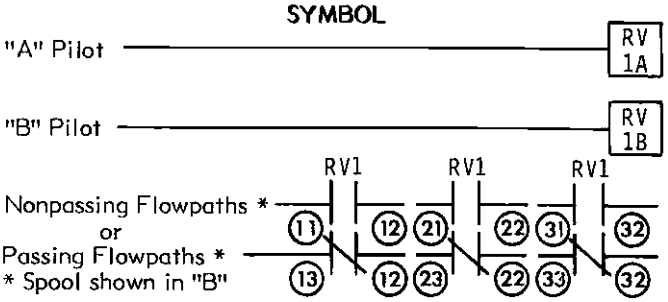

Note: Multi-flow-path relays are not available with 10-32 UNF ported baseplates.

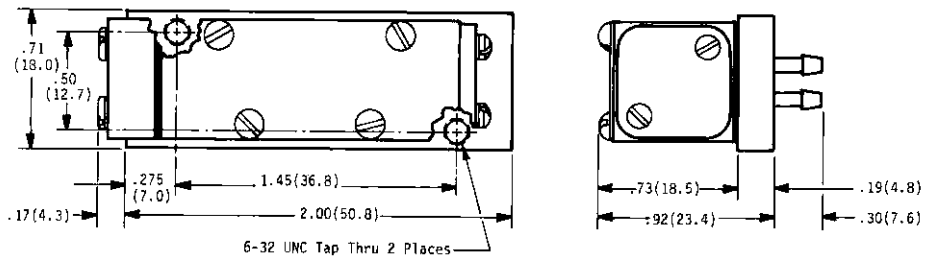

MODEL MDA1
Dimensions in inches (mm)

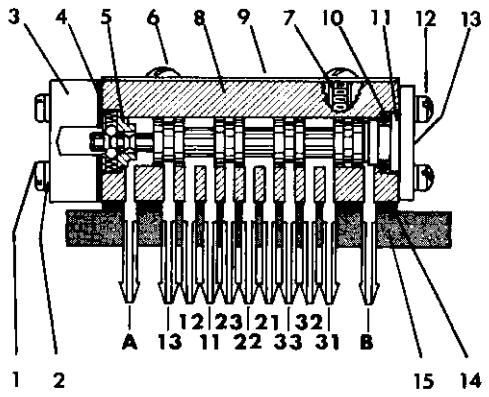

MDA1

ITEM	PART NO.	DESCRIPTION	MODELS	NO. REQD.
1	628-6	Screw	MDA*	2
2	820-1	Lockwasher	MDA*	4
3	204-1	Window	MDA*	1
4	215-1	Gasket	MDA*	1
5	283-2	Detent Assy.	MDA*	1
6	632-1	Screw	MDA*	4
7	424-1	Screw Retainer	MDA*	4
8	428-2	Body & Spool Assy.	MDA*	1
9	1182-3	Nameplate	MDA*	1
10	908-1	"O" Ring	MDA*	1
11	109-1	Spool Stop	MDA*	1
12	624-6	Screw	MDA*	1
13	110-2	End Plate	MDA*	1
14	1268-1	Gasket	MDA*	1
15	1267-2	Base 1/16 Bot.	MDA1	1
	1302-1	Base 1/16 Side	MDA2	1

MODEL MSH * Spring Return (25 psig) Multi-flow-path
MODEL MSF * Spring return (8 psig) Multi-flow-path
* 0 - Without Baseplate
1 - 1/16 Barb Baseplate, Bot. Ports
2 - 1/16 Barb Baseplate, Side Ports

SPECIFICATIONS
Models MSHO and MSFO furnished with gasket and mounting screws. Other models furnished mounted to baseplate.

OPERATING PRESSURE
50 psig (3.5 bar) Optimum Pressure
30 to 100 psig (2 to 7 bar) Maximum Range

PILOT PRESSURE
Model MSH * - 25 psig (1.7 Bar) required at pilot "A" to shift spool to "B" position.
Model MSF * - 8 psig (0.6 bar) required at pilot "A" to shift spool to "B" position.

TEMPERATURE RANGE
+32° to +200°F (0 to +93°C) Maximum Range
See Page 6 for details concerning low and high temperature operation.

RESPONSE TIME
3 milliseconds at 50 psig (3.5 bar)

Note: Multi-flow-path relays are not available with 10-32 UNF ported baseplates.

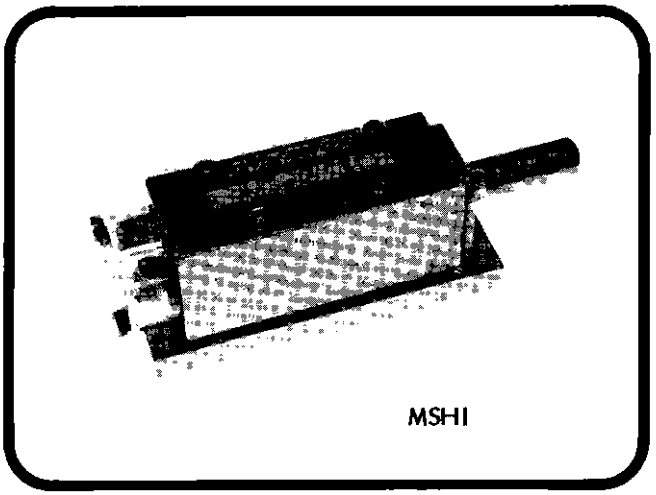
MSHI

SYMBOL

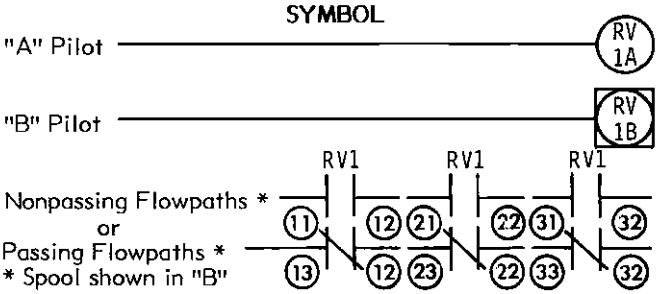

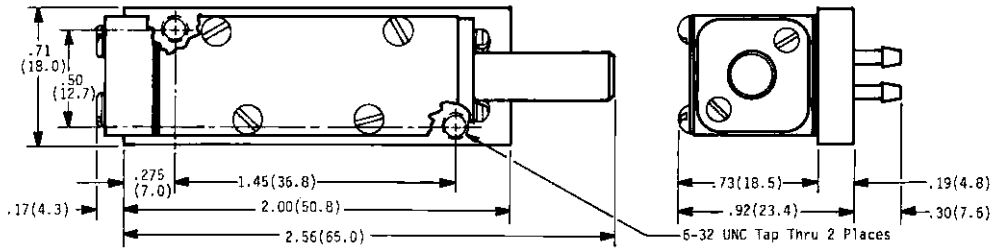

MODEL MSH1
Dimensions in inches (mm)

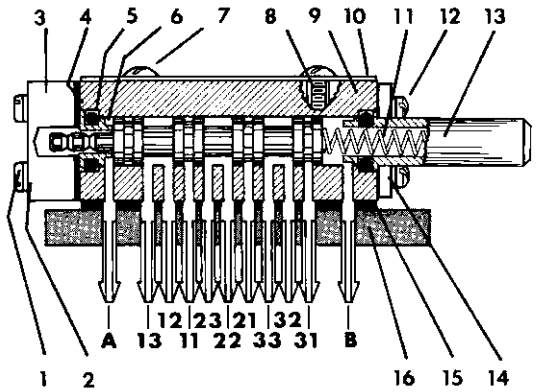

MSHI

ITEM	PART NO.	DESCRIPTION	MODELS	NO. REQD.
1	628-6	Screw	MSH*, MSF*	2
2	820-1	Lockwasher	MSH*, MSF*	4
3	204-1	Window	MSH*, MSF*	1
4	215-1	Gasket	MSH*, MSF*	1
5	908-1	"O" Ring	MSH*, MSF*	2
6	130-1	Spool Stop	MSH*, MSF*	1
7	632-1	Screw	MSH*, MSF*	4
8	424-1	Screw Retainer	MSH*, MSF*	4
9	428-2	Body & Spool Assy.	MSH*, MSF*	1
10	1182-1	Nameplate	MSH*	1
	1182-2	Nameplate	MSF*	1
11	167-1	Spring(25 psig)	MSH*	1
	214-1	Spring (8 psig)	MSF*	1
12	624-6	Screw	MSH*, MSF*	2
13	199-1	Spool Stop	MSH*, MSF*	1
14	110-3	End Plate	MSH*, MSF*	1
15	1268-1	Gasket	MSH*, MSF*	1
16	1267-2	Base 1/16 Bot.	MSH1, MSF1	1
	1302-1	Base 1/16 Side	MSH2, MSF2	1

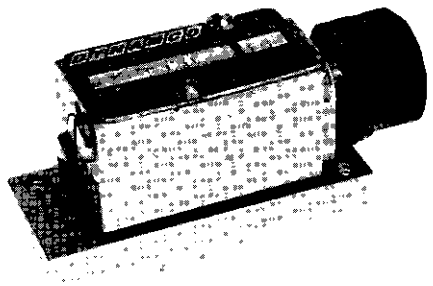

FC1

MODEL FC * Flow Control
- * 0 - Without Baseplate
- 1 - 1/16 Barb Baseplate, Bot. Ports
- 2 - 1/16 Barb Baseplate, Side Ports
- 4 - 10-32 UNF Baseplate, Bot. Ports
- 5 - 10-32 UNF Baseplate, Side Ports

SPECIFICATIONS
Model FC0 furnished with gasket and mounting screws. Other models furnished mounted to baseplate.

OPERATING PRESSURE
50 psig (3.5 bar) Optimum Pressure
30 to 100 psig (2 to 7 bar) Maximum Range

TEMPERATURE RANGE
+32 to +200°F (0 to +93°C) Maximum Range
Caution--At lower temperatures, the dew point of the air supply must be lower than the low operating temperature to prevent icing. At high temperatures, DYNAMCO polyurethane tubing is limited to 130° at 50 psig.

FLOW CHARACTERISTICS
Adjustable metered flow from port 1 to port A.
Free flow from port A to port 1.

SYMBOL

TD1

See Page 15 for typical timing circuits using "FC" Series flow controls.

Recommend maximum time delay at 50 psig (3.5 bar) when used with volume chambers and relays shown	Time	Vol. Chamber	Relay
	35 sec	VC1	LSH *
	5 sec	VC2	LSH *
	5 sec	VC1	LDA *
	3 sec	VC2	LDA *

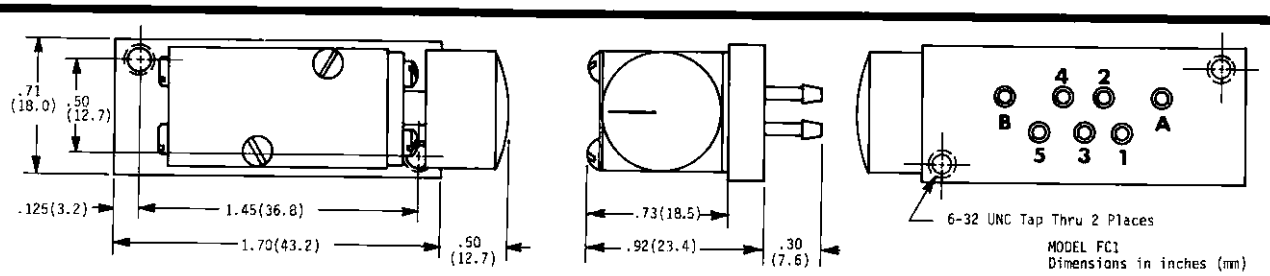

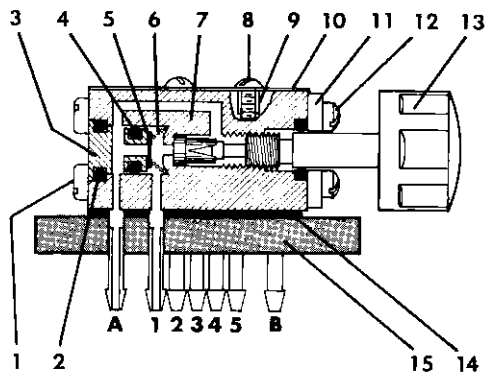

FC1

ITEM	PART NO.	DESCRIPTION	MODELS	NO. REQD.
1	667-3	Screw	FC*	2
2	908-1	"O" Ring	FC*	2
3	194-1	End Plug	FC*	1
4	906-1	"O" Ring	FC*	1
5	202-1	Disc	FC*	1
6	386-1	Spring	FC*	1
7	248-2	Body Assy.	FC*	1
8	632-1	Screw	FC*	2
9	424-1	Screw Retainer	FC*	2
10	1181-1	Nameplate	FC*	1
11	110-5	End Plate	FC*	1
12	624-2	Screw	FC*	2
13	249-2	Knob & Needle	FC*	1
14	197-1	Gasket	FC*	1
15	187-2	Base 1/16 Bot.	FC1	1
	189-2	Base 1/16 Side	FC2	1
	1167-1	Base 10-32 Bot.	FC4	1
	1173-1	Base 10-32 Side	FC5	1

MODEL FCP3 Flow Control, Panel Mounted

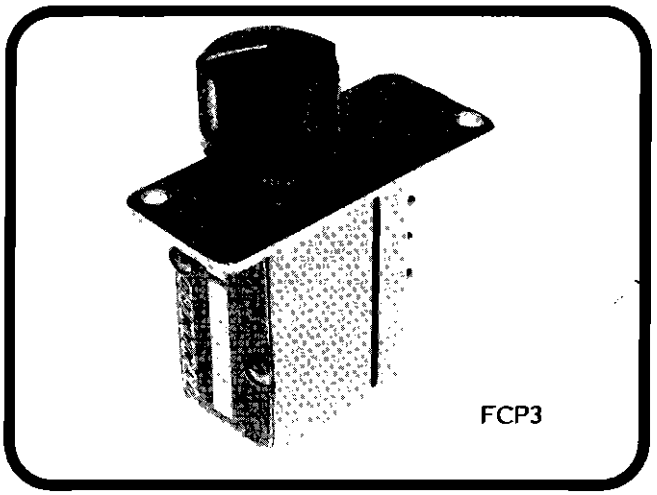
FCP3

SPECIFICATIONS
Model FCP3 Flow Control furnished mounted to 1/16 barb baseplate, bottom ports.

OPERATING PRESSURE
50 psig (3.5 bar) Optimum Pressure
30 to 100 psig (2 to 7 bar) Maximum Range

TEMPERATURE RANGE
+32 to +200°F (0 to +93°C) Maximum Range
Caution--At lower temperatures, the dew point of the air supply must be lower than the low operating temperature to prevent icing. At high temperatures, DYNAMCO polyurethane tubing is limited to 130° at 50 psig.

FLOW CHARACTERISTICS
Adjustable metered flow from port 1 to port A.
Free flow from port A to port 1.

Recommend maximum time delay at 50 psig (3.5 bar) when used with volume chambers and relays shown	Time	Vol. Chamber	Relay
	35 sec	VC1	LSH*
	5 sec	VC2	LSH*
	5 sec	VC1	LDA*
	3 sec	VC2	LDA*

SYMBOL

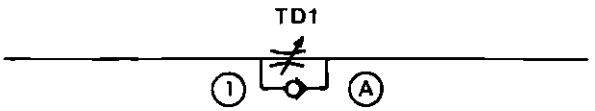

See Page 15 for typical timing circuits using "FCP" Series flow controls.

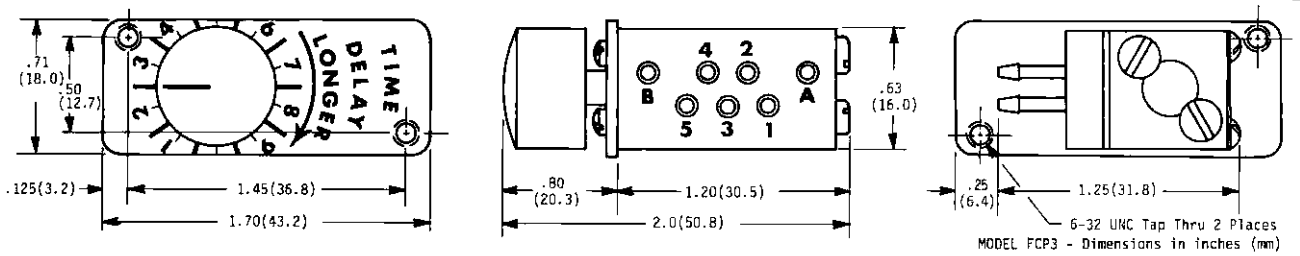

MODEL FCP3 - Dimensions in inches (mm)

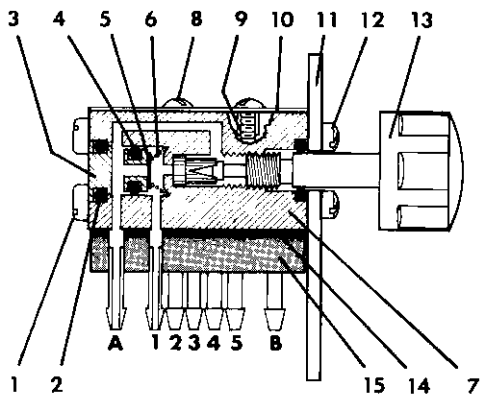

FCP3

ITEM	PART NO.	DESCRIPTION	MODELS	NO. REQD.
1	667-3	Screw	FCP3	2
2	908-1	"O" Ring	FCP3	2
3	194-1	End Plug	FCP3	1
4	906-1	"O" Ring	FCP3	1
5	202-1	Disc	FCP3	1
6	386-1	Spring	FCP3	1
7	248-2	Body Assy.	FCP3	1
8	632-1	Screw	FCP3	2
9	424-1	Screw Retainer	FCP3	2
10	1181-1	Nameplate	FCP3	1
11	1202-1	Mounting Plate	FCP3	1
12	624-2	Screw	FCP3	2
13	249-2	Knob & Needle	FCP3	1
14	197-1	Gasket	FCP3	1
15	193-2	Connector Plate	FCP3	1

VOLUME CHAMBERS "VC" SERIES

DYNAMCO

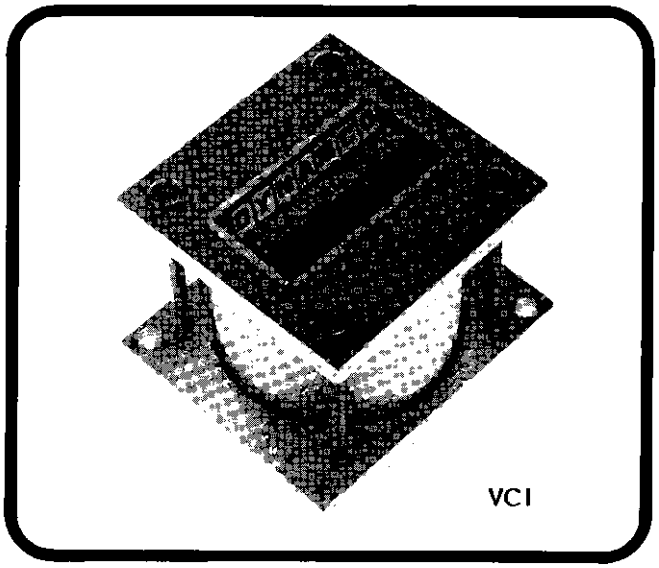

SYMBOL

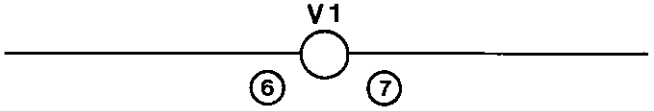

MODEL VC *

Volume Chamber
* 1 - Standard Volume Chamber
1/16 Barb Bottom Ports
2 - Small Volume Chamber
1/16 Barb Bottom Ports

SPECIFICATIONS
Model VC1 internal volume = 1.1 cu. in. (18 cu. cms)
Model VC2 internal volume = 0.4 cu. in. (6.6 cu. cms)

OPERATING PRESSURE
50 psig (3.5 bar) Optimum Pressure
30 to 100 psig (2 to 7 bar) Maximum Range

TEMPERATURE RANGE
+32 to +200°F (0 to +93°C) Maximum Range
Caution--At lower temperatures, the dew point of the air supply must be lower than the low operating temperature to prevent icing. At high temperatures, DYNAMCO polyurethane tubing is limited to 130° at 50 psig.

FLOW CHARACTERISTICS
Internal volume connected to both port 6 and port 7. Either port may be used for input or output signals.

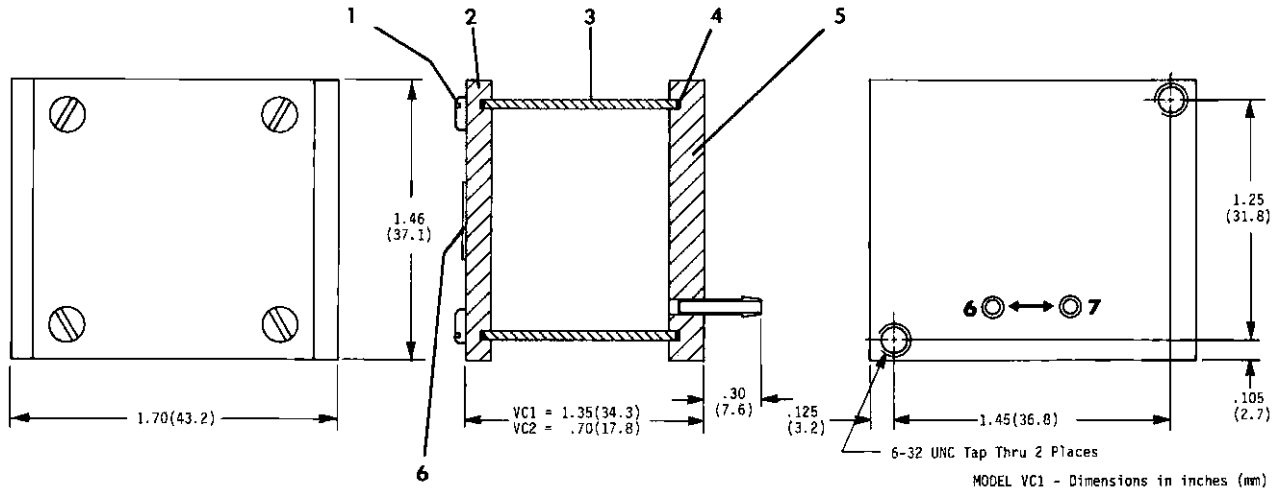

ITEM	PART NO.	DESCRIPTION	NUMBER REQUIRED	
			MODEL VC1	MODEL VC2
1	635-3	Screw	4	0
	631-3	Screw	0	4
2	252-1	Volume Top	1	1
3	253-1	Cylinder	1	0
	253-2	Cylinder	0	1
4	258-1	Gasket	2	2
5	273-2	Base with Barbs	1	1
6	1189-1	Nameplate	1	1

TIME DELAY CIRCUITS

Three components are used in time delay circuits: (1) a flow control to restrict the flow of air and to provide a by-pass check valve to quickly reset the time delay, (2) a relay to sense the pressure buildup and (3) a volume chamber to increase the volume of air required which increases the time period. These devices may be interconnected as shown at the right to accomplish the timing functions of TIMING IN, TIMING OUT and TIMED PULSE.

TIMING IN (SPRING RETURN)

A pressure signal at port "1" of TD1 is restricted by the orifice causing the pressure to gradually increase in the volume chamber and at port "A" of the pressure sensing relay TDRV1A. How fast this pressure increases is dependent on the setting of the variable orifice. When this pressure increases to 25 psig (relay valve LSH), the spool shifts to the alternate "A" position causing flow path "1" to "2" to become passing and flow path "5" to "4" to become nonpassing. When the pressure signal is exhausted (removed) at port "1" of TD1, the pressure in the volume chamber is vented through the by-pass check valve out port "1" for the fast exhaust of pressure at the "A" pilot of TDRV1A. When pressure decreases below 25 psig, the spring takes command of the spool, shifting it back to the normal "B" position. The spool in the "B" position changes the flow paths back to their normal condition.

TIMING IN (DETENTED)

A pressure signal at port "1" of TD2 is restricted by the orifice causing the pressure to gradually increase in the volume chamber and at port "A" of TDRV2A. When this pressure increases to 12 psig, the spool snaps into the alternate "A" position. The detent causes the snap action and also holds the spool in the alternate "A" position when the pressure signal at port "1" is removed. The spool will remain in the "A" position until a reset signal is applied to the port "B" of TDRV2B.

TIMING OUT

The Timing Out function works almost the same as the Timing In function described above except a pressure signal at port "A" of TD3 flows through the by-pass check valve directly to the "A" pilot of relay TDRV3A, shifting the spool into the "A" position. When the pressure signal is removed from the "A" port of TD3, the pressure is trapped in the volume chamber, holding the relay in the "A" spool position. When the pressure in the volume chamber reduces to less than 25 psig, the spring takes command of the spool and returns it to the "B" position.

TIMED PULSE

A Timed Pulse system requires a flow control, a volume chamber and a spring returned relay connected so a pressure signal goes both to the "A" pilot of the relay valve, shifting the spool to the alternate "A" position, and also the "1" port of TD4. When the pressure in the "B" pilot becomes great enough, the spring forces the spool back into the normal "B" position. When the input signal is removed, the spool remains in the normal "B" position.

TIMING IN (SPRING RETURN)

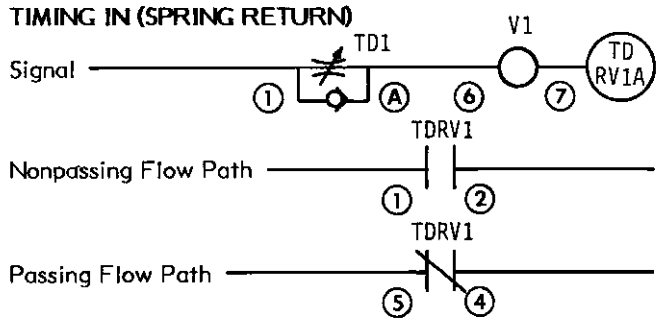

TIMING IN (DETENTED)

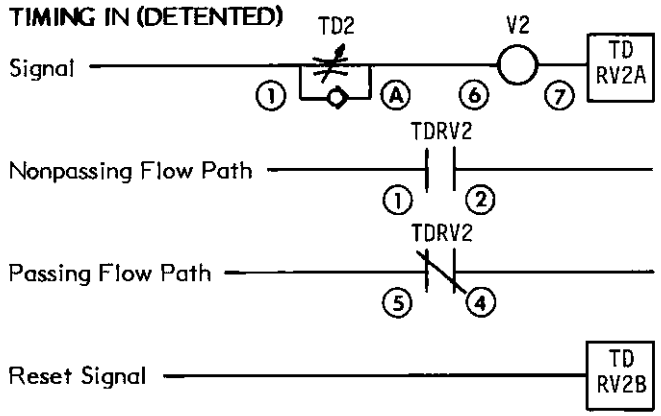

TIMING OUT

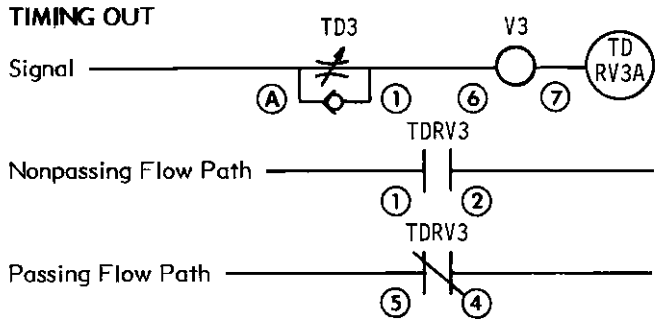

TIMED PULSE

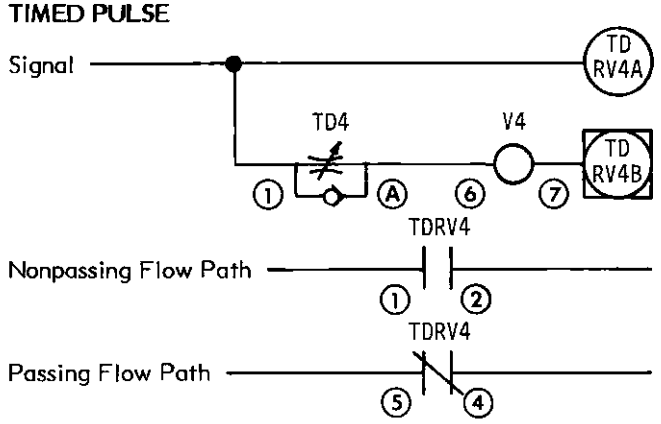

TIMING RELAYS "TR" SERIES

DYNAMCO

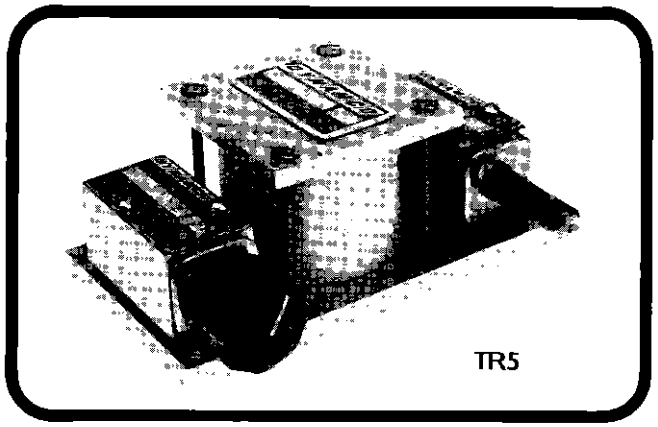

Timing by air consists of restricting a flow of air to a pressure sensing device. Air pressure downstream of the restriction will then take a certain time to build up sufficiently to cause the pressure sensor to respond. The interval between the introduction of air pressure to the restriction, and the response of the pressure sensor, is the time measured by the device.

Three components are used in time delay circuits: (1) a flow control to restrict the flow of air and to provide a by-pass check valve to quickly reset the time delay, (2) a relay to sense the pressure buildup and (3) a volume chamber to increase the volume of air required which increases the time period.

The DYNAMCO "TR" Series Timing Relays provide a convenient assembly of a flow control, a volume chamber and a pressure sensing relay. This assembly is offered in eight different models to cover most of the time delay functions required in air logic systems. By selecting the model number for the timing application and connecting the flow control, volume and the relay as shown on page 15, the basic timing function of TIMING IN, TIMING OUT AND TIMED PULSE can be accomplished with the "TR" Series Timing Relay.

When the spring returned type of relay is selected, the relay will reset as soon as the input signal is removed. When a detented type of relay is selected, the relay once shifted will remain in the shifted position when the input signal is removed. It can then be reset at a later time. The detented relay also provides a snap action, so that the valve provides full flow capacity immediately.

When it is necessary to convert a maintained signal to a momentary signal, commonly referred to as a "one shot" or "timed pulse" function, a spring returned relay is used with the signal connected to the "A" port of the relay and to the "1" port of the flow control. The output of the flow control is connected to a volume chamber and then to the "B" port of the relay. This arrangement allows the relay to shift immediately when the input signal comes on and then shift back to its normal position as soon as the pressure increases at port "B" to a level that allows the spring to take command of the spool, returning the spool to its normal position.

"TR" Series Components and Recommended Time Range at 50 psig

Model	TR3	TR4	TR5	TR6	TR7	TR8	TR11	TR12
Max. Delay Sec.	35	5	35	5	5	3	35	5
Reset Sec.	0.5	0.25	0.5	0.25	0.5	0.25	0.5	0.25
Min. Delay Sec.	0.05		0.05		0.05		0.05	
Relay	LDHO	LDHO	LSHO	LSHO	LDAO	LDAO	LSAO	LSAO
Type of Relay	*	*	Spr.Ret.	Spr.Ret.	Detent	Detent	**	**
Volume Chamber	VC1	VC2	VC1	VC2	VC1	VC2	VC1	VC2
Flow Control	FCO	FCO	FCO	FCO	FCO	FCO	FCO	FCO
		S + D		S		D		Fl.

*Detented Spring Return Relay
**Free Floating Spool requires 25 psig (1.7 bar) bucking air pressure

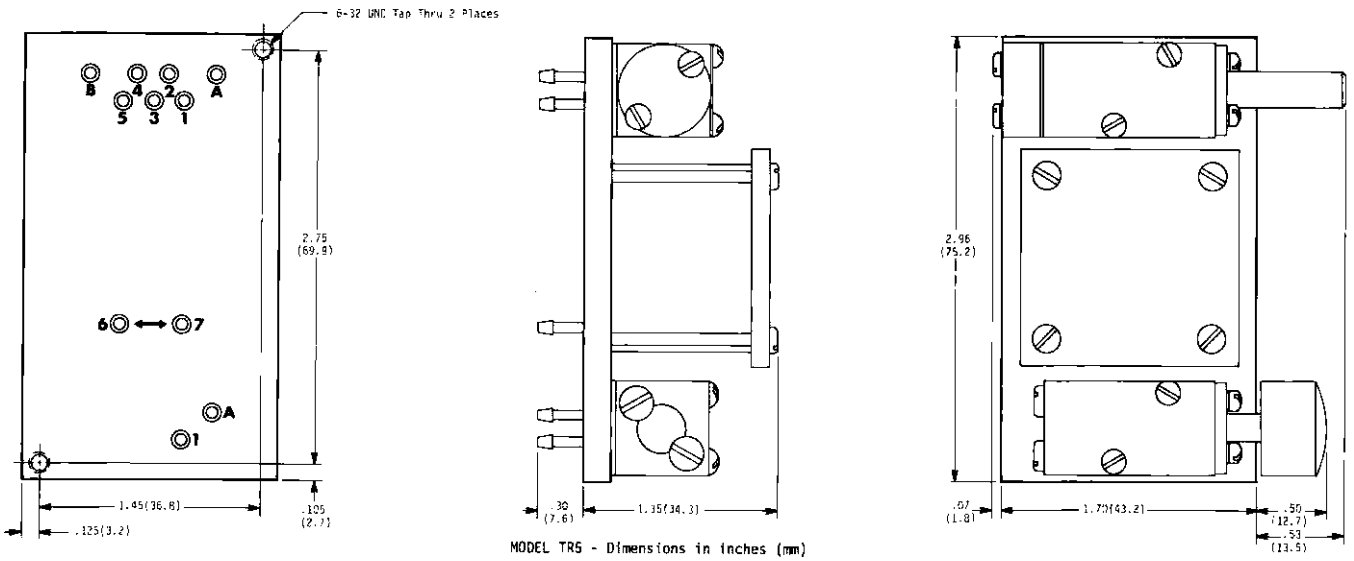

MODEL TR5 - Dimensions in inches (mm)

MODEL TRC * Calibrated Timing Relay

TRC10	1-10	Seconds Time Range
TRC60	3-60	Seconds Time Range
TRC180	9-180	Seconds Time Range
TRC600	½-10	Minutes Time Range

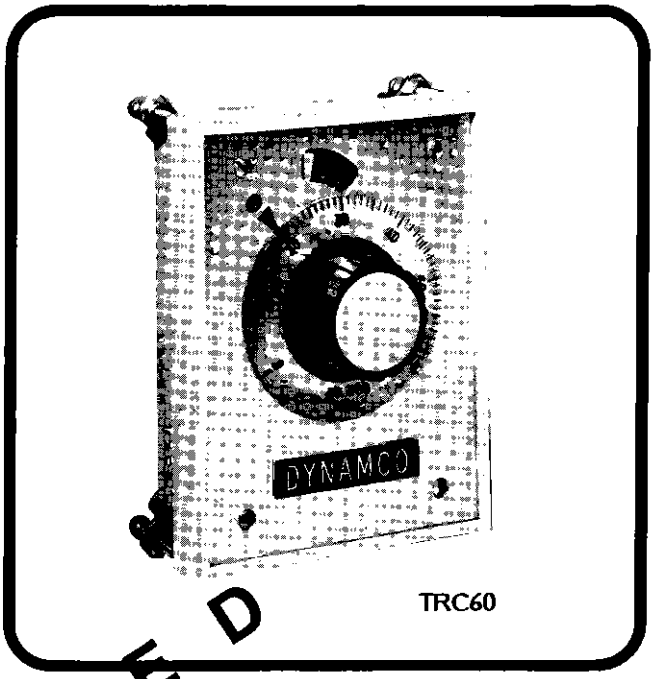

TRC60

SPECIFICATIONS
Panel mounted TRC* fits panel opening 3.5 x 4.7 inches (89 x 119mm). Maximum panel thickness 0.5 inch (13mm).

REPEATABILITY
±1% at full scale. Repeatability not affected by variations in supply pressure.

OPERATING PRESSURE
50 psig (3.5 bar) Optimum Range
30 to 100 psig (2 to 7 bar) Maximum Range

OPERATION
A maintained pressure signal at port P is immediately present at port A. When the preselected time has elapsed, the pressure signal at port P shifts its output from port A to port B (port A exhausts). The Timing Relay is reset by removing the pressure signal from port P. Minimum reset time - 200 milliseconds.

OPERATION DIAGRAM

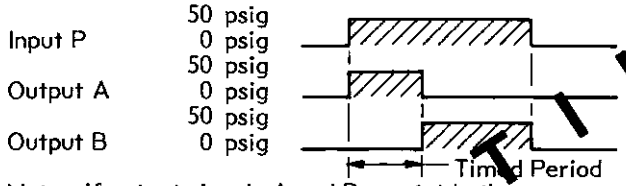

Note: if output signals A and B are not both required, plug the port not used.

SYMBOL
TR1

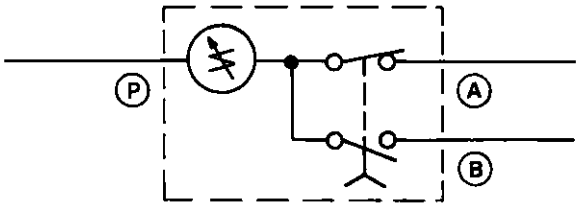

VISUAL INDICATORS
Timer active indicator is on when signal P is on. Time remaining flag indicates approximate time left in timed period.

PORTS
Ports A, B and P are 1/8-27 NPT.

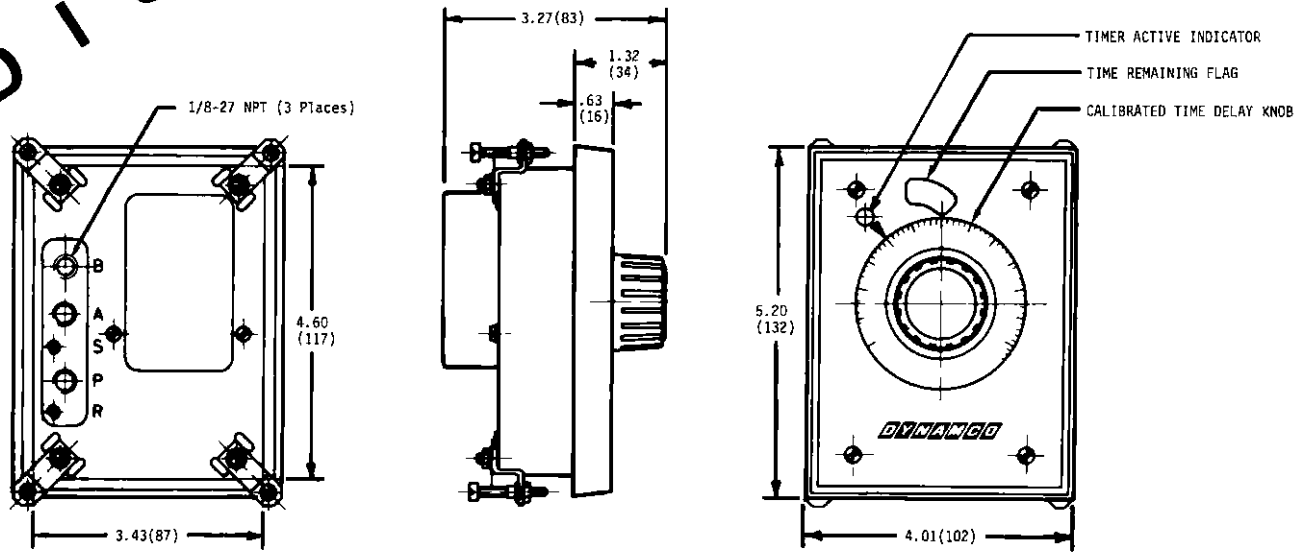

1/16 Barbed Baseplates for all Relays (4 way, 5 ported), Shuttles and FC Flow Controls.

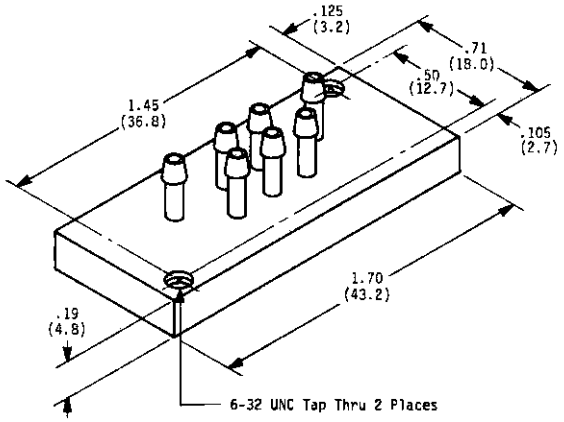

PART NUMBER 187-2

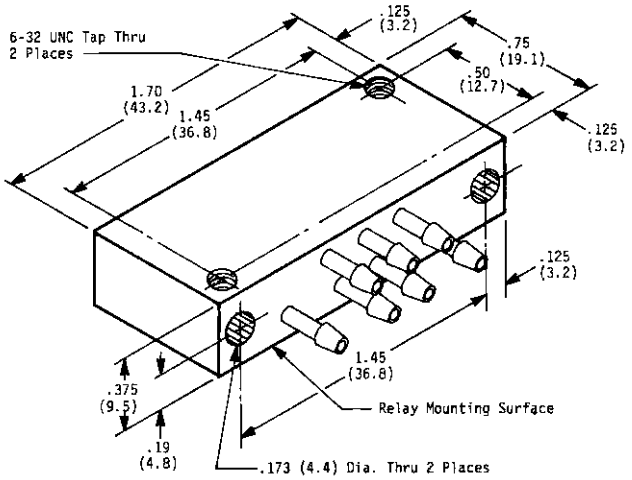

PART NUMBER 189-2

10-32 UNF Baseplates for all Relays (4 way, 5 ported), Shuttles and FC Flow Controls.

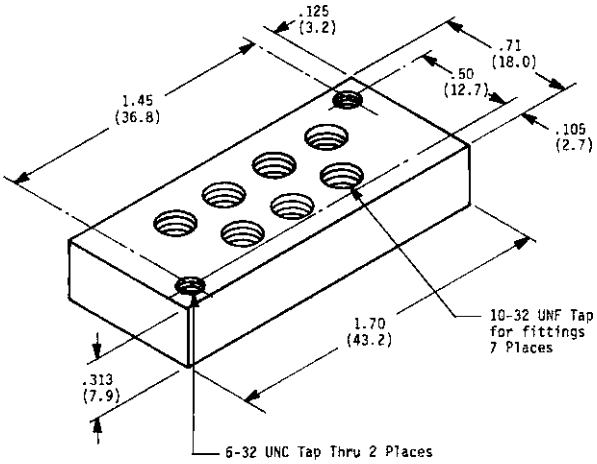

PART NUMBER 1167-1

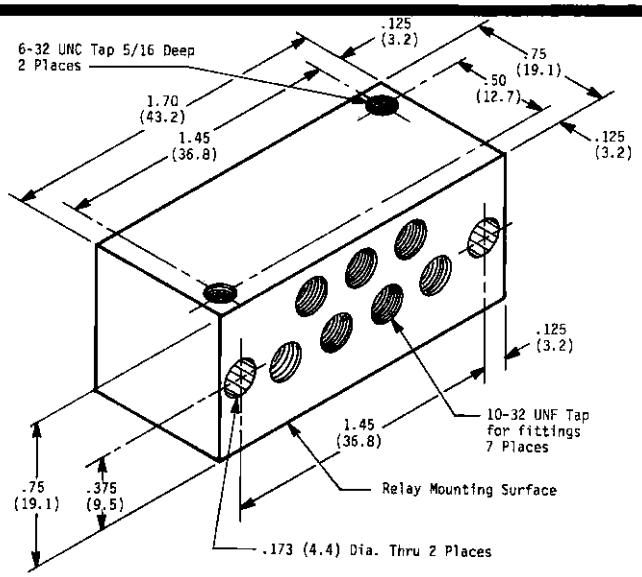

PART NUMBER 1173-1

1/16 Barbed Baseplates for Multi-Flow-Path Relays.

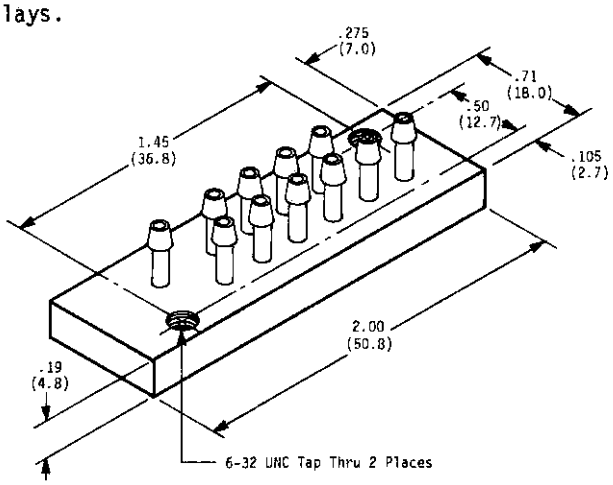

PART NUMBER 1267-2

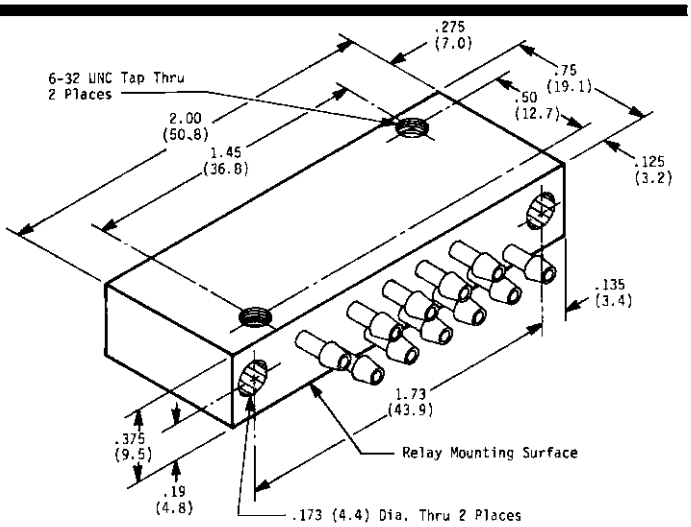

PART NUMBER 1302-1

MODEL PMT_ _ _ _ Time Delay

PMT003A	.3 - 3	Seconds Time Range
PMT010A	1 - 10	Seconds Time Range
PMT030A	3 - 30	Seconds Time Range
PMT060A	6 - 60	Seconds Time Range
PMT120A	12 - 120	Seconds Time Range
PMT180A	18 - 180	Seconds Time Range

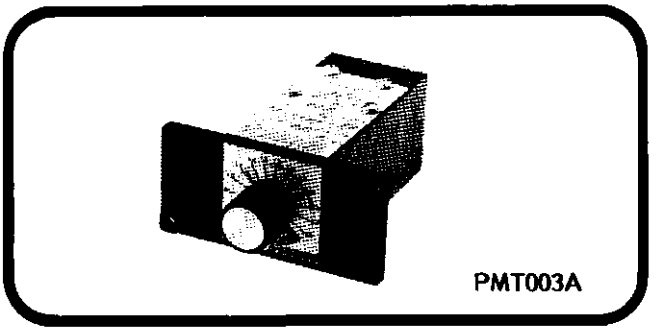
PMT003A

SPECIFICATIONS
Panel mounted PMT fits panel opening 1.5 X 1.5 inches (38.1 X 38.1 mm) or may be mounted to panel in CC enclosure (requires two panel spaces). Mount with two #8 screws. Drill mounting holes at assembly. Extends 3.4 inches (87 mm) behind face of panel and .9 inches (23 mm) in front of panel.

ACCURACY
Calibration + 15% of setting
Repeatability + 5% of setting

OPERATING PRESSURE
50 psig (3.5 bar) Optimum Pressure
30 to 100 psig (2 to 7 bar) Maximum

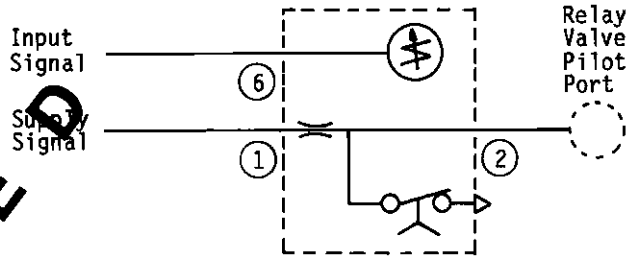

OPERATION
The output of the PMT is always connected directly to the pilot port of a LSH0 or LDA0 relay. Relay must be ordered as a seperate item. A maintained pressure at ports 1 and 6 starts the time delay with the signal at 1 vented to atmosphere. When the delay is completed, the vent to atmosphere is closed causing the pressure at port 2 to increase. Port 2 connected to a pilot port of a LSH0 or LDA0 relay causes the relay to shift recognizing the completion of the delay. Removal of the maintained input signal resets the delay and removes the signal at port 2.

PORTS
All ports are 10-32 UNF.

MODEL TRCS_ _, TRCM_ _, TRCH_ _
Calibrated Timing Relay

TRCS10	0.3 - 10	Seconds Time Range
TRCS100	3.0 - 100	Seconds Time Range
TRCM10	0.3 - 10	Minutes Time Range
TRCM100	3.0 - 100	Minutes Time Range
TRCH10	0.3 - 10	Hours Time Range
TRCH100	3.0 - 100	Hours Time Range

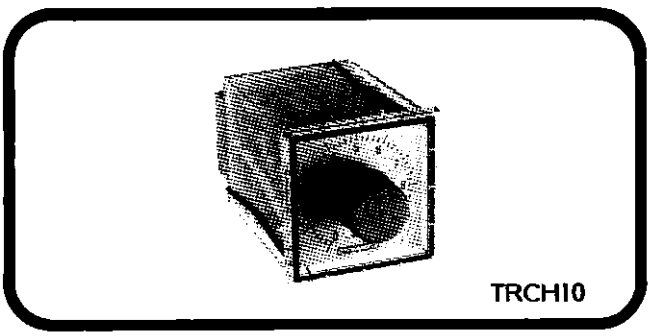
TRCH10

SPECIFICATIONS
Panel mounted calibrated timing relay fits panel opening 2.63 X 2.63 inches (67 X 67 mm). Extends 4.3 inches (109.5 mm) behind face of panel.

REPEATABILITY
+2% of scale value

OPERATING PRESSURE
50 psig (3.5 bar) Optimum Pressure
30 to 100 psig (2 to 7 bar) Maximum Range

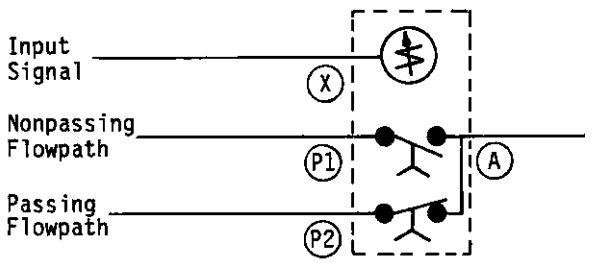

OPERATION
A maintained pressure signal at port X actuates the timer. When the preselected time period has elapsed, the timing relay shifts causing a change in the flow path condition. The normally nonpassing flow path (P1 to A) becomes passing, and the normally passing flow path (P2 to A) becomes nonpassing. Note: Only one flow path can be used. The timing relay is reset by removing the pressure signal from port X. Minimum reset time is 200 milliseconds.

PORTS
All ports are 10-32 UNF.

ENCLOSURES
Air Logic components such as relays, shuttles, time delays, pushbuttons, indicators, etc., can be quickly assembled into a control system using DYNAMCO enclosures. These enclosures not only provide a method of mounting the hardware, but they also protect the hardware from the surrounding environment and from non-authorized adjustment of the components.

PUSHBUTTON ENCLOSURES
The pushbutton enclosures (PBE series) are designed to provide a convenient mounting for pushbuttons, rotary selectors and indicators when these items are located at an operator station that is remote from the main control system. Connection between the pushbutton enclosure and the control system is usually through conduit or an adequately protected tubing harness. The mounting holes for the hardware are precut.

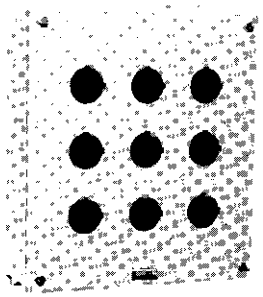

PBE9 PUSHBUTTON ENCLOSURE

CONTROL ENCLOSURES
Control enclosures, Models CC13, CC14, CC16 and CC18, are designed specifically to simplify the construction of a DYNAMCO air logic control system. These enclosures are provided with specially designed component mounting panels which are supported by a continuous hinge and mounting posts. Captive screws attach the panel to the mounting posts, and the panel can be swung open as illustrated, by loosening these screws. The panels have station cutouts for mounting the components and have tube ducts attached to the back of the panel for convenient circuit construction. DYNAMCO components can be mounted in seconds at each station by means of screws from the back of the panel. The tubing ducts house the interconnecting tubing, tees and manifolds that do not require attachment to the panel. The result is a clean, compact assembly with the components mounted on the front of the panel and all tubing and connections at the back.

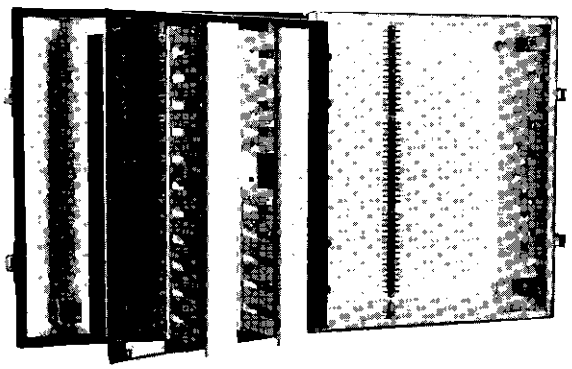

CC13 CONTROL ENCLOSURE

Each of these control enclosures is supplied complete with the maximum number of mounting screws required to mount a component at each station and a sheet of panel component identification markers sufficient to meet the requirements of most control circuits. These enclosures are also supplied with a bulkhead mounting block, providing a 1/4" NPT female thread directly into the side of the enclosure. Terminal strips (Part Number 371-5) are attached to the rear inside wall providing an interconnection point between the control and the machine. The door of these control enclosures is provided with a circuit print pocket. Pushbuttons, selectors and indicators may be mounted in the door panel.

UNIVERSAL CHASSIS
The universal chassis provides the same method of mounting DYNAMCO air logic components as that provided by the mounting panel in the control enclosures except the universal chassis is designed so that it can be mounted to any flat surface. Since the interconnecting tubing is protected by the unique "U" shape of the chassis, tube ducts are not provided. The 1001 Series enclosures provide a convenient way to enclose the universal chassis with the chassis being retained in the enclosure with four (4) screws. Sufficient clearance is provided when using the universal chassis with the 1001 Series enclosure to mount pushbuttons, selectors and indicators in the enclosure door.

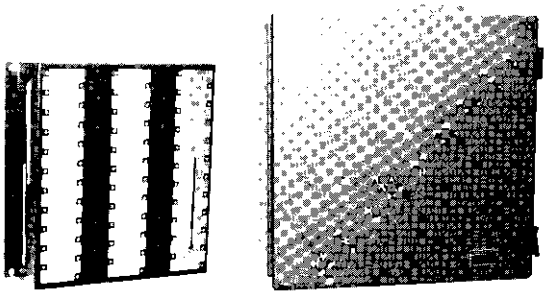

1280-1 UNIVERSAL CHASSIS
1001-5 CHASSIS ENCLOSURE

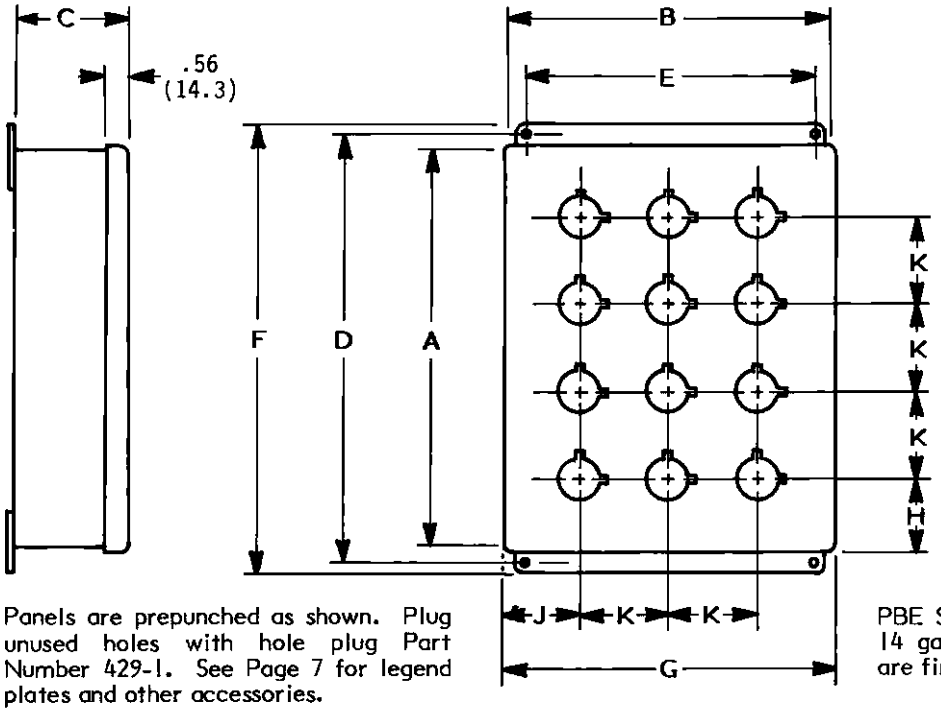

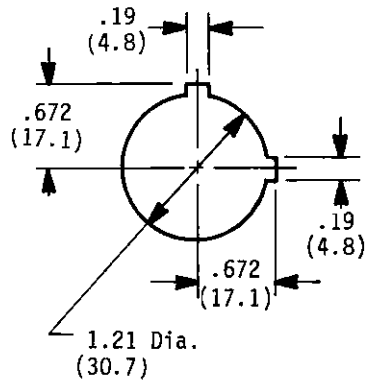

TYPICAL MOUNTING HOLE

Panels are prepunched as shown. Plug unused holes with hole plug Part Number 429-1. See Page 7 for legend plates and other accessories.

PBE Series enclosures are constructed of 14 gauge steel with welded corners and are finished in gray hammertone enamel.

Dimensions in inches (mm)

MODEL	NO. OF HOLES	BOX SIZE			MOUNTING		OVERALL				
		A	B	C	D	E	F	G	H	J	K
PBE1	1	3.5 (88.9)	3.25 (82.6)	2.75 (69.9)	4.0 (101.6)	2.38 (60.5)	4.5 (114.3)	3.47 (88.1)	1.86 (47.2)	1.73 (43.9)	- -
PBE2	2	5.75 (146.1)	3.25 (82.6)	2.75 (69.9)	6.25 (158.8)	2.38 (60.5)	6.75 (171.5)	3.47 (88.1)	1.86 (47.2)	1.73 (43.9)	2.25 (57.2)
PBE3	3	8.0 (203.2)	3.25 (82.6)	2.75 (60.9)	8.5 (215.9)	2.38 (60.5)	9.0 (228.6)	3.47 (88.1)	1.86 (47.2)	1.73 (43.9)	2.25 (57.2)
PBE4	4	10.25 (260.4)	3.25 (82.6)	2.75 (60.9)	10.75 (273.1)	2.38 (60.5)	11.25 (285.8)	3.47 (88.1)	1.86 (47.2)	1.73 (43.9)	2.25 (57.2)
PBE6	6	9.5 (241.3)	6.25 (158.8)	3.0 (76.2)	10.0 (254.0)	5.38 (136.7)	10.5 (266.7)	6.47 (164.3)	2.61 (66.3)	2.11 (53.6)	2.25 (57.2)
PBE9	9	9.5 (241.3)	8.5 (215.9)	3.0 (76.2)	10.0 (254.0)	7.63 (193.8)	10.5 (266.7)	8.72 (221.5)	2.61 (66.3)	2.11 (53.6)	2.25 (57.2)
PBE12	12	11.75 (298.5)	8.5 (215.9)	3.0 (76.2)	12.25 (311.2)	7.63 (193.8)	12.75 (323.9)	8.72 (221.5)	2.61 (66.3)	2.11 (53.6)	2.25 (57.2)
PBE16	16	11.75 (298.5)	10.75 (273.1)	3.0 (76.2)	12.25 (311.2)	9.88 (251.0)	12.75 (323.9)	10.97 (278.6)	2.61 (66.3)	2.11 (53.6)	2.25 (57.2)
PBE25	25	14.0 (355.6)	13.0 (330.2)	3.0 (76.2)	14.5 (368.3)	12.13 (308.1)	15.0 (381.0)	13.22 (335.8)	2.61 (66.3)	2.11 (53.6)	2.25 (57.2)

HOLE ARRANGEMENT

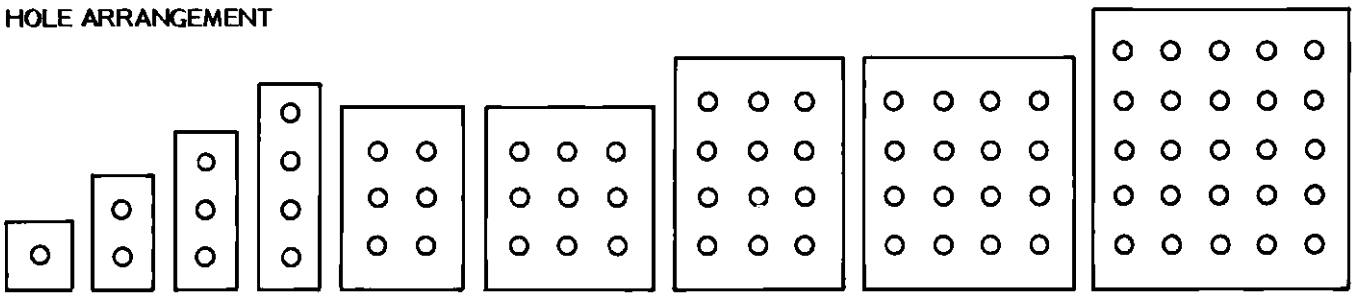

PBE1 PBE2 PBE3 PBE4 PBE6 PBE9 PBE12 PBE16 PBE25

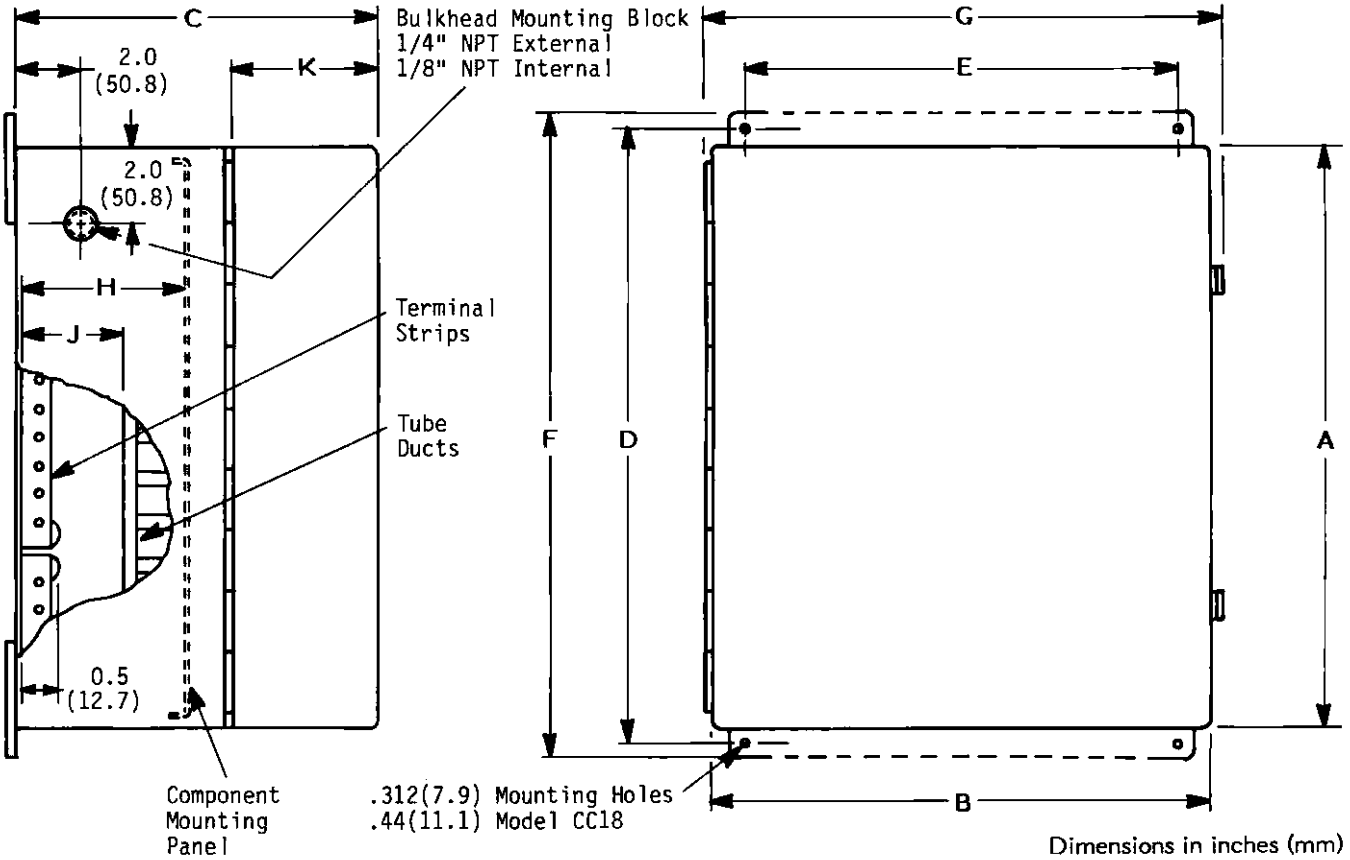

Dimensions in inches (mm)

The CC13, CC14 and CC16 control enclosures are constructed of 16 gauge steel with welded seams and finished with a gray hammertone enamel exterior and a white enamel interior. CC18 is constructed of 12 gauge steel with welded seams and finished gray primer exterior and a white enamel interior. Each enclosure is furnished complete with the following:

1. Aluminum component mounting panel(s)
2. Component mounting screws (for each station)
3. Panel component identification markers (423-1)
4. Tube ducts attached to back of panel
5. Bulkhead mounting block (396-1)
6. Terminal strips (371-5). Total quantity "L" of 1/16 tube connections.

The door of the enclosure can be used to mount pushbuttons, selectors, indicators or other devices having a similar or less depth of projection behind the panel. A circuit print pocket is provided in the door and the door may be secured with a padlock (not included).

The panels used in these enclosures (not including hinge) are available for custom installations as either a panel assembly or a panel only. (The panel assembly includes the tube ducts.)

CC12:	Panel Assembly	1256-1	Panel Only	1256-2
CC13:	" "	1257-1	" "	1257-2
CC14:	" "	1258-1	" "	1258-2

MODEL	NO. OF STATIONS	BOX SIZE			MOUNTING		OVERALL		H	J	K	NO. CONN.
		A	B	C	D	E	F	G				L
CC14	70	16.0 (406.4)	16.5 (419.1)	10.0 (254.0)	16.75 (425.5)	14.5 (368.3)	17.5 (444.5)	17.5 (444.5)	5.0 (127.0)	2.0 (50.8)	3.5 (88.9)	45

ASSEMBLED CONTROL ENCLOSURE

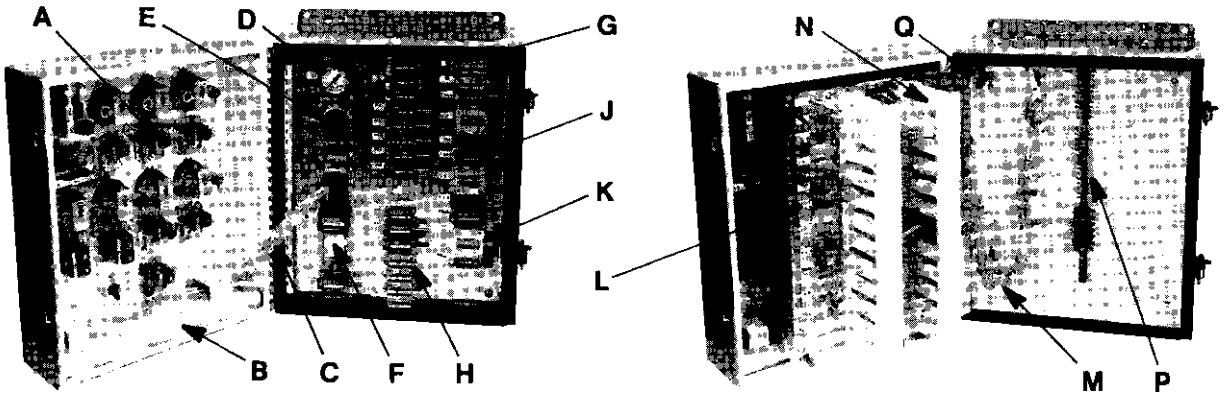

A. Pushbuttons, selectors and indicators in door**
B. Circuit print pocket
C. Tubing harness bundle between door and control
D. Pressure gage (requires 3 stations)
E. Pressure regulator (requires 3 stations)
F. Secondary filter (requires 5 stations)
G. Program-Air module (requires 3 stations)
H. Relays, shuttles and flow controls (1 station)
J. TR Series timer (requires 4 stations)
K. Volume chamber (requires 2 stations)
L. Component identification markers
M. Tubing harness bundle between control and terminal
N. Tubing ducts
P. Terminals provide easy connection to machine
Q. Bulkhead mounting block

* * Maximum recommended number of pushbuttons, selectors or indicators per enclosure door:

Model CC12	12
Model CC13	18
Model CC14	30

See Page 8 for mounting hole locations.

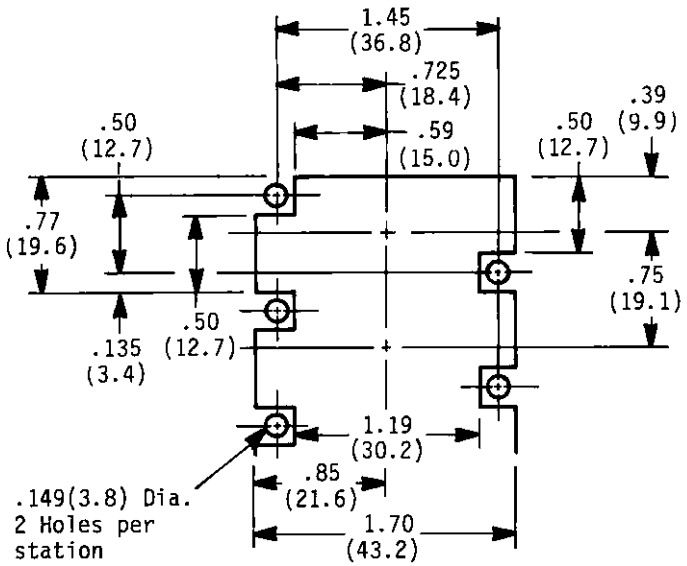

STATION CUTOUT

Dimensions in inches (mm)

PANEL STATION ARRANGEMENT

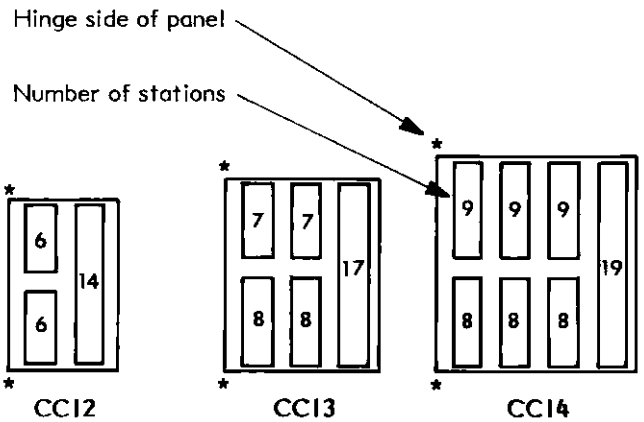

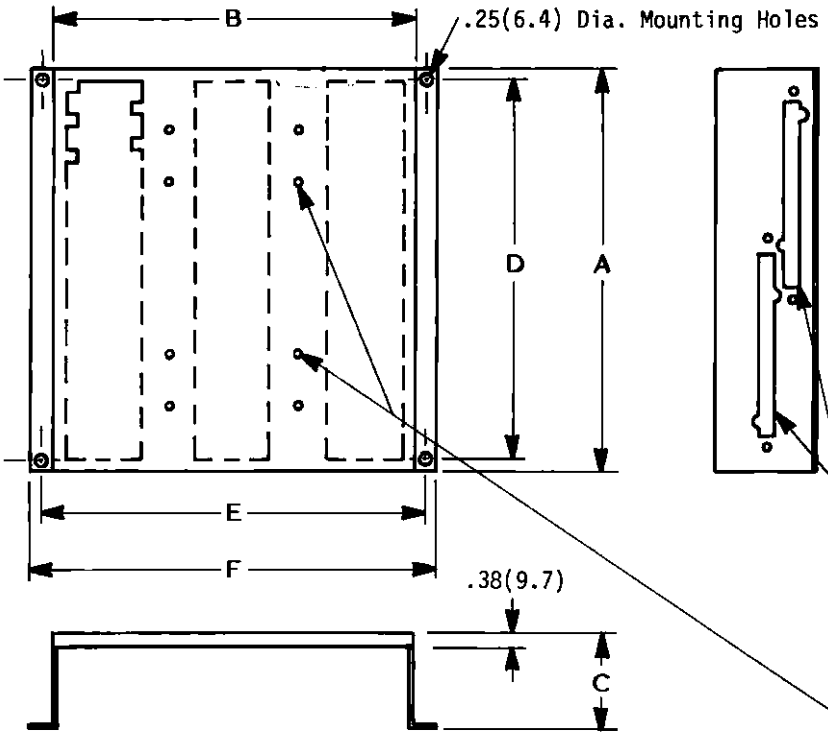

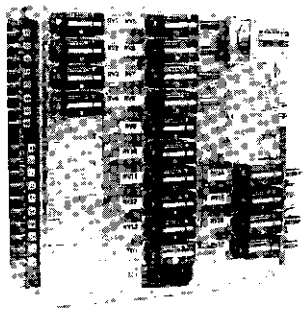

UNIVERSAL CHASSIS MODEL 1280-1

H - Provision for mounting terminal strips (371-5 or 1200-1) or quick disconnect (1253-). Terminal strips and quick disconnects should not be mounted in this position when universal chassis is mounted in the 1001 Series enclosures.

G - Provision for mounting manifolds (205-4 or 1270-1)

See Page 5 for station cutout dimensions

Dimensions in inches (mm)

MODEL	NO. OF STATIONS	USE WITH ENCLOSURE	A	B	C	D	E	F	G	H
1278-1	12	1001-3	5.13 (130.3)	5.45 (138.4)	2.25 (57.2)	4.25 (108.0)	6.25 (158.8)	6.75 (171.5)	1	2
1279-1	22	1001-4	8.88 (225.6)	5.58 (141.7)	2.25 (57.2)	8.25 (209.6)	6.25 (158.8)	6.88 (174.8)	2	4
1280-1	33	1001-5	8.88 (225.6)	7.78 (197.6)	2.25 (57.2)	8.25 (209.6)	8.25 (209.6)	8.88 (225.6)	4	4
1281-1	51	1001-6	13.38 (339.9)	9.58 (243.3)	2.25 (57.2)	12.25 (311.2)	10.25 (260.4)	10.88 (276.4)	6	6
1282-1	76	1001-7	14.88 (380.0)	11.58 (294.1)	2.25 (57.2)	14.25 (362.0)	12.25 (311.2)	12.88 (327.2)	9	6

STATION ARRANGEMENT

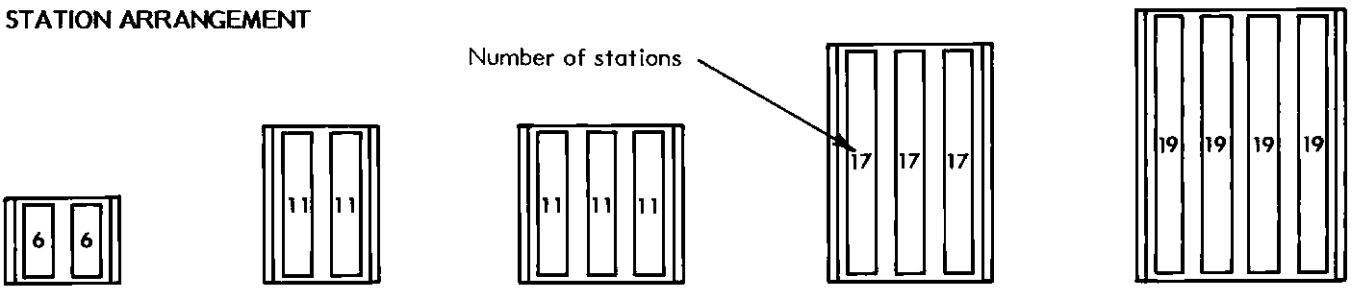

1278-1 1279-1 1280-1 1281-1 1282-1

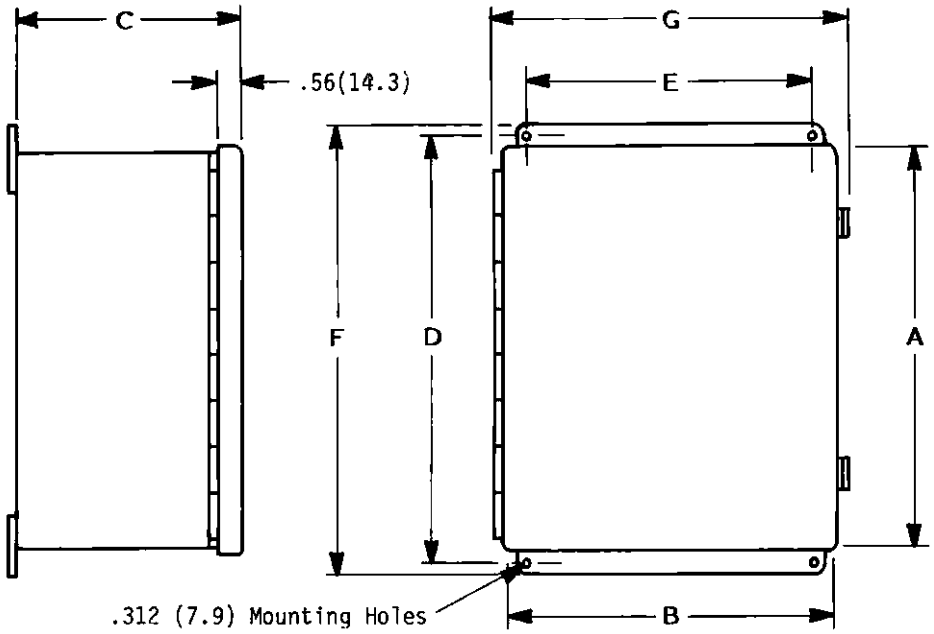

Dimensions in inches (mm)

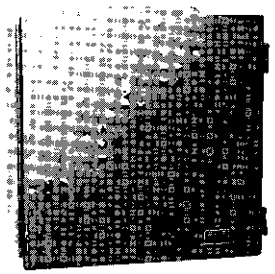

UNIVERSAL CHASSIS ENCLOSURE MODEL 1001-5

Enclosure constructed of 16 gauge steel with welded corners and finished in gray hammertone enamel.

MODEL	USE WITH UNIVERSAL CHASSIS	NO. OF STATIONS	BOX SIZE			MOUNTING		OVERALL	
			A	B	C	D	E	F	G
1001-3	1278-1	12	8.0 (203.2)	6.0 (152.4)	6.0 (152.4)	8.75 (222.3)	4.0 (101.6)	9.5 (241.3)	7.0 (177.8)
1001-4	1279-1	22	10.0 (254.0)	8.0 (203.2)	6.0 (152.4)	10.75 (273.1)	6.0 (152.4)	11.5 (292.1)	8.9 (226.1)
1001-5	1280-1	33	10.0 (254.0)	10.0 (254.0)	6.0 (152.4)	10.75 (273.1)	8.0 (203.2)	11.5 (292.1)	10.9 (276.9)
1001-6	1281-1	51	14.0 (355.6)	12.0 (304.8)	6.0 (152.4)	14.75 (374.7)	10.0 (254.0)	15.5 (393.7)	12.9 (327.7)
1001-7	1282-1	76	16.0 (406.4)	14.0 (355.6)	8.0 (203.2)	16.75 (425.5)	12.0 (304.8)	17.5 (444.5)	14.9 (378.5)

ACCESSORIES

LEGEND PLATES	
One Line Inscription	PB I 1
Two Line Inscription	PB I 2
Three Line Inscription	PB I 3
PUSHBUTTON HOLE COVER	429-1
IDENTIFICATION MARKERS	
Tube Numbers 1-45	553-1
Tube Numbers 46-90	553-2
Panel Components	423-1
Pushbuttons, Limits, etc.	423-2
TERMINAL HARDWARE	
15 Connection, 1/16 Barb	371-5
11 Connection, 10-32 Female	1200-1
Single Station 10-32 Terminal Block	1217-1
STATION COVERS	
Blank Single Station	395-1
Single Station with Grommet	395-7
TUBE TIES	
40 small - 10 large	554-3
COMPONENT MOUNTING SCREWS	
6-32 X 1/4 screws with captive lockwasher	808-4
QUICK DISCONNECTS	
8 Connections, 10-32 Elbow, Mounted Half	1253-1
8 Connections, 10-32 Thru, Mounted Half	1253-2
8 Connections, 10-32 Elbow, Removeable Half	1253-3

CC13 - CC14 - CC16 - CC18 MOUNTING HOLE LOCATIONS

Below are shown drawings of the maximum number of pushbuttons, selectors, indicators, etc. recommended for the CC Series enclosures. Because of the variety of possible hole patterns, these enclosures come with no holes as the standard. Enclosures may be ordered by specifying the number of holes desired and their location.
For example: CC14 with 8 holes located at
Row B: 2, 3, 4 and 5
Row C: 2, 3, 4 and 5

Pricing for the addition of pushbutton holes will be quoted on request.

Note: Centerline distance between holes is 2.25 (57.2) both horizontally and vertically.

Dimensions in inches (mm)

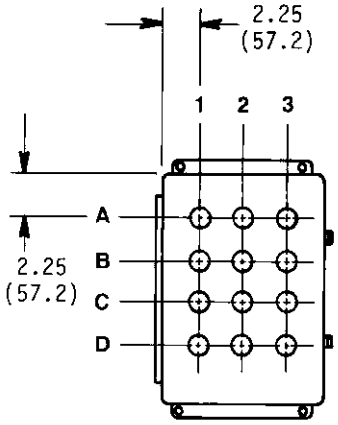

CC12

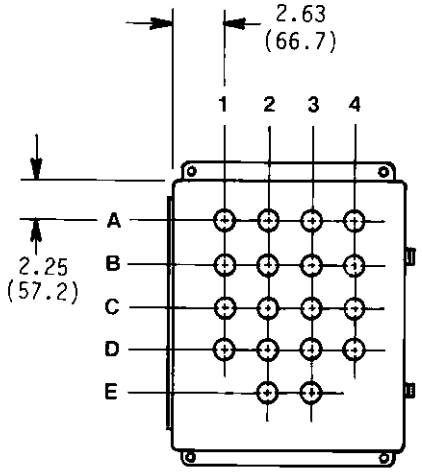

CC13

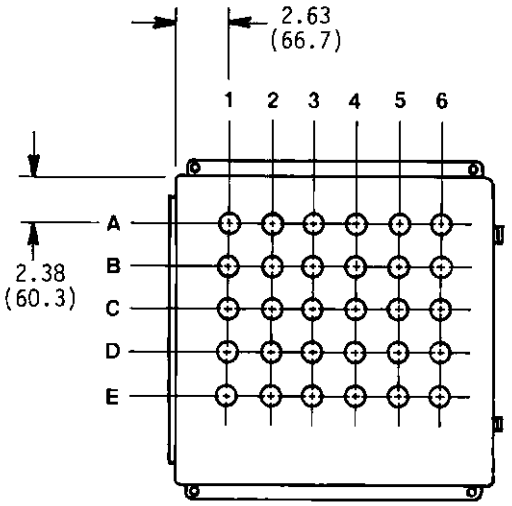

CC14

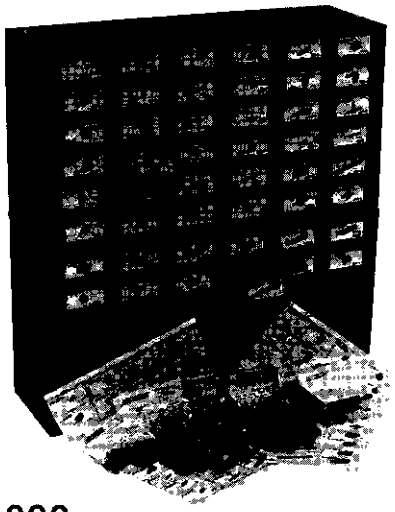

FK200

MODEL FK200 Miniature Fitting Kit

DESCRIPTION
72 drawer cabinet complete with selected DYNAMCO fittings.

FITTINGS
Model FK200 contains 49 different part numbers of selected DYNAMCO industrial quality fittings, terminals and manifolds. A total of 357 pieces provide a selection of 1/16 and 1/8 single barb tube connections along with 10-32 UNF and 1/8 NPT port connections. All items included are described in DYNAMCO Bulletin 500 and the kit may be expanded as required.

CABINET
Model FK200 contains two industrial quality welded steel frame cabinets. Each cabinet measures 18" W x 9½" H x 6" D and contains 36 clear plastic pull-out drawers (72 drawers total). Cabinets may be stacked vertically as pictured, may stand independently or may be mounted on a wall. Drawers may be repositioned as needed.

LABELS
Drawer front labels provide a photo of the item along with the DYNAMCO part number for fast and easy selection of parts. Room is provided on the label for other identification numbers.

STOCK
Additional fittings may be purchased from your local DYNAMCO distributor or from the factory. Convenient reorder forms are included with each kit.

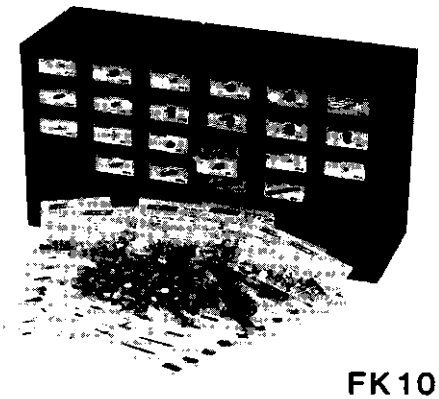

FK100

MODEL FK100 Miniature Fitting Kit

DESCRIPTION
36 drawer cabinet complete with selected DYNAMCO fittings.

FITTINGS
Model FK100 contains 22 different part numbers of selected DYNAMCO industrial quality fittings, terminals and manifolds. A total of 252 individual pieces provide a selection of 1/16 and 1/8 single barb tube connections along with 10-32 UNF and 1/8 NPT port connections. Part numbers selected for this kit are the most popular of DYNAMCO's fittings. This kit may be expanded to include additional items as required.

CABINET
Model FK100 includes an industrial quality welded steel frame cabinet measuring 18" W x 9½" H x 6" D. The cabinet contains 36 clear plastic pull-out drawers for convenient visual inspection of stock. Drawers may be repositioned as needed.

LABELS
Drawer front labels provide a photo of the item along with the DYNAMCO part number for fast and easy selection of parts. Room is provided on the label for other identification numbers. Extra labels are included to identify new fittings when added to the kit.

STOCK
Additional fittings may be purchased from your local DYNAMCO distributor or from the factory. Convenient reorder forms are included with each kit.

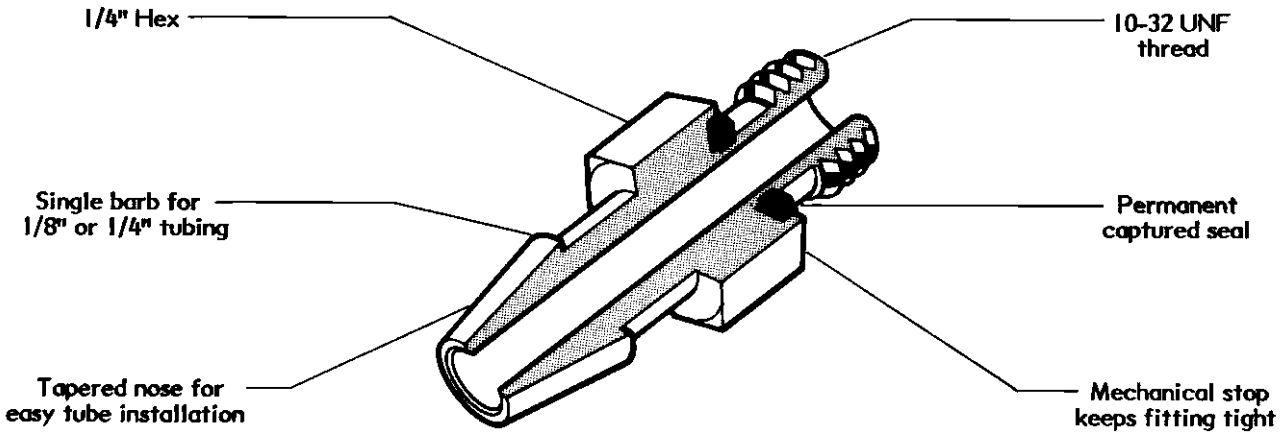

TUBING

Many years have been invested in the development and testing of DYNAMCO's tubing and fittings. The result is a special compound, polyurethane tubing and single barb fittings that assure ease of assembly and a highly reliable connection. The tubing is very flexible allowing small radius bends and forms easily into neat harness bundles for circuit interconnection and for communication with the machine. Once the tubing is connected it can be removed and then reconnected without having to clip off the end of the tube.

Two sizes of tubing are available. The smaller tubing 1/16" ID x 1/8" OD (.06(1.6) x .13(3.2)) is used for interconnection between logic components, for communication with power valve pilots and limit valves and all other connections not requiring a high flow. The larger tubing 1/8" ID x 1/4" OD (.13(3.2) x .25(6.4)) is used for control air supply lines, communication to the pilots of power valves that require a large volume of air to shift or that are located a great distance from the signal source and all other requirements demanding a higher flow capacity. All DYNAMCO 3 Super Relays and Shuttles have a flow capacity to match either size of tubing.

The tubing and fittings shown in this bulletin are rated for continuous duty at a pressure of 50 psig (3.4 bar) and at a temperature of 130°F (54°C). These tubes and fittings are recommended for use in DYNAMCO air logic control systems, supplied with clean, dry and regulated (nonlubricated) compressed air. DYNAMCO's polyurethane tubing is compounded from polyether based urethanes, as opposed to polyester, for superior stability in humid and elevated temperature environments. For use in other applications, pressure ranges or temperature ranges, contact DYNAMCO for additional details. Colors other than those shown for the 1/8" ID x 1/4" OD tube sizes are also available. Contact DYNAMCO for availability and and price.

Many air logic control applications require protection of the tubing located outside of the control enclosure to prevent pinching or cutting of the tubes. Standard rigid or flexible conduits may be used for this protection by pulling the tubing through the conduit similar to electrical wire. Note, when pulling DYNAMCO polyurethane tubing through conduit, use either talcum or petroleum base lubricants only. DO NOT USE SILICONE LUBRICANT. DYNAMCO also offers a flexible PVC (polyvinyl chloride) tubing as a shroud to protect up to four each 1/8" OD tubes. This PVC tubing (150-5) fits the barb on the "SL" limit valve tube enclosure 405-2 (see Bulletin 200) and the bulkhead shroud adapter 422-2 (page 7 of this bulletin).

TUBING MATERIAL	COLOR	TUBE ID	TUBE OD	PART NUMBER
Polyurethane	Black	.06(1.6)	.13(3.2)	148-0
Polyurethane	Brown	.06(1.6)	.13(3.2)	148-1
Polyurethane	Red	.06(1.6)	.13(3.2)	148-2
Polyurethane	Orange	.06(1.6)	.13(3.2)	148-3
Polyurethane	Yellow	.06(1.6)	.13(3.2)	148-4
Polyurethane	Green	.06(1.6)	.13(3.2)	148-5
Polyurethane	Blue	.06(1.6)	.13(3.2)	148-6
Polyurethane	Violet	.06(1.6)	.13(3.2)	148-7
Polyurethane	Gray	.06(1.6)	.13(3.2)	148-8
Polyurethane	White	.06(1.6)	.13(3.2)	148-9
Polyurethane	Clear	.06(1.6)	.13(3.2)	150-3
Polyurethane	Black	.13(3.2)	.25(6.4)	149-0
Polyurethane	Brown	.13(3.2)	.25(6.4)	149-1
Polyurethane	Red	.13(3.2)	.25(6.4)	149-2
Polyurethane	Green	.13(3.2)	.25(6.4)	149-5
Polyurethane	Blue	.13(3.2)	.25(6.4)	149-6
Polyurethane	Clear	.13(3.2)	.25(6.4)	150-4
PVC	Clear	.38(9.5)	.50(12.7)	150-5

Dimensions in inches (mm)

TUBE TO MALE THREAD	TUBE ID	TUBE OD	MALE THREAD	L	FLOW DIAMETER
 211-1	.06(1.6)	.13(3.2)	10-32 UNF	.45(11.4)	.05(1.3)
 210-1	.06(1.6)	.13(3.2)	1/8 NPT	.91(23.1)	.05(1.3)
 211-2	.13(3.2)	.25(6.4)	10-32 UNF	.58(14.7)	.10(2.5)
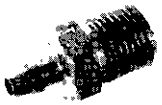 521-1	.13(3.2)	.25(6.4)	1/8 NPT	.81(20.6)	.10(2.5)
 521-2	.13(3.2)	.25(6.4)	1/16 NPT	1.1(27.9)	.12(3.0)

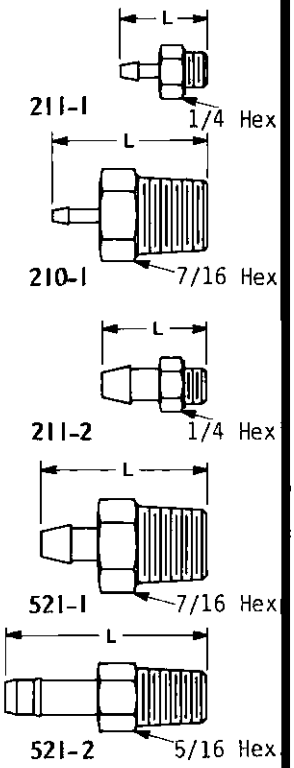

TUBE TO FEMALE THREAD	TUBE ID	TUBE OD	FEMALE THREAD	L	FLOW DIAMETER
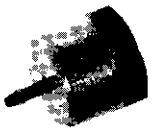 210-2	.06(1.6)	.13(3.2)	1/8 NPT	.8 (20.3)	.05(1.3)
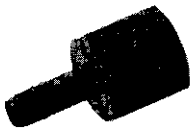 522-1	.13(3.2)	.25(6.4)	1/8 NPT	1.0(25.4)	.12(3.0)

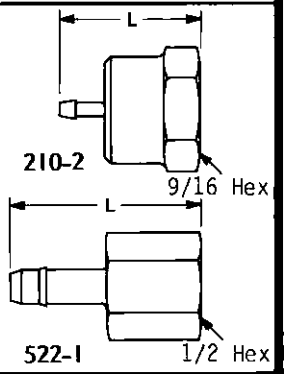

TUBE TO TUBE	TUBE ID	TUBE OD	M	L	FLOW DIAMETER
 391-2	.06(1.6)	.13(3.2)	.3 (7.6)	.9 (22.9)	.05(1.3)
 520-1	.13(3.2)	.25(6.4)	.3 (7.6)	.8 (20.3)	.10(2.5)

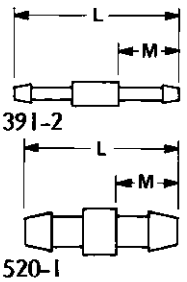

FEMALE THREAD TO FEMALE THREAD	FEMALE THREAD	D	L	FLOW DIAMETER
 1046-1	10-32 UNF	.25(6.4)	.42(10.7)	.16(4.1)

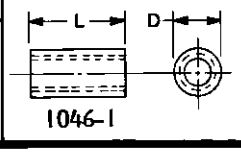

TUBE TO MALE THREAD

	TUBE ID	MALE THREAD	S	H	FLOW DIAMETER
 524-2	.06(1.6)	1/8 NPT	.5 (12.7)	.66(16.8)	.05(1.3)
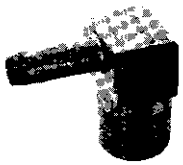 524-1	.13(3.2)	1/8 NPT	.8 (20.3)	.75(19.1)	.12(3.0)

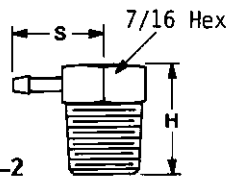

524-2

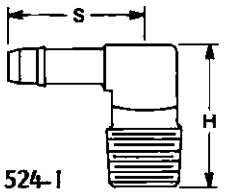

524-1

TUBE TO FEMALE THREAD

	TUBE ID	FEMALE THREAD	S	H	FLOW DIAMETER
 526-1	.06(1.6)	1/8 NPT	.5 (12.7)	.5 (12.7)	.05(1.3)
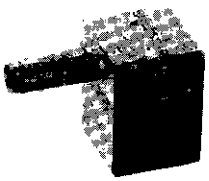 526-3	.13(3.2)	1/8 NPT	.8 (20.3)	.7 (17.8)	.12(3.0)

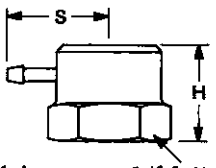

526-1

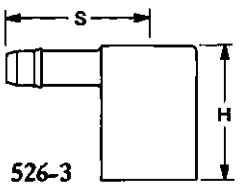

526-3

TUBE TO TUBE

	TUBE ID	TUBE OD	S	H	FLOW DIAMETER
 523-1	.13(3.2)	.25(6.4)	.7 (17.8)	.9 (22.9)	.12(3.0)

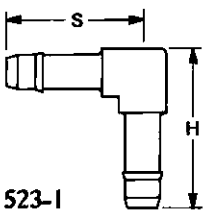

523-1

FEMALE THREAD TO MALE THREAD

	FEMALE THREAD	MALE THREAD	S	H	FLOW DIAMETER
 528-1	10-32 UNF	1/8 NPT	.22(5.6)	.66(16.8)	.16(4.1)

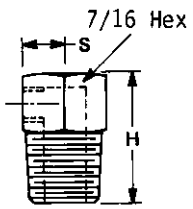

528-1

TUBE TEES

	PORT	TUBE ID	H	L	FLOW DIAMETER
 209-1	A B C	.06(1.6) .06(1.6) .06(1.6)	.5 (12.7)	1.0(25.4)	.05(1.3) .05(1.3) .05(1.3)
 209-4	A B C	.13(3.2) .06(1.6) .13(3.2)	.6 (15.2)	1.5(38.1)	.12(3.0) .05(1.3) .12(3.0)
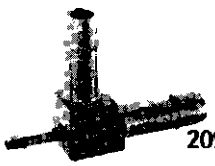 209-6	A B C	.06(1.6) .13(3.2) .13(3.2)	.7 (17.8)	1.2(30.5)	.05(1.3) .12(3.0) .12(3.0)
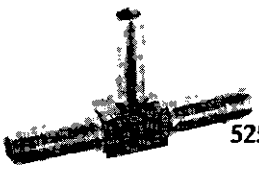 525-1	A B C	.13(3.2) .13(3.2) .13(3.2)	.7 (17.8)	1.5(38.1)	.12(3.0) .12(3.0) .12(3.0)

209-1
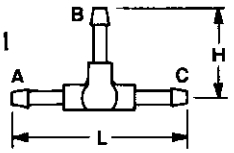

209-4
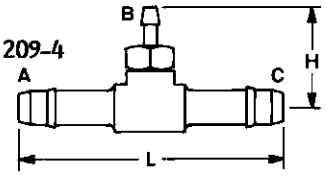

209-6
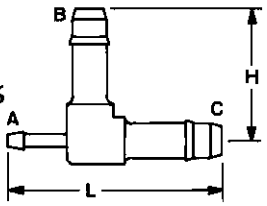

525-1
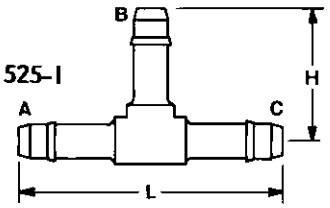

FEMALE THREAD TEE

	PORT	FEMALE THREAD	H	L	FLOW DIAMETER
 1047-1	A B C	10-32 UNF 10-32 UNF 10-32 UNF	.38(9.6)	.6 (15.2)	.16(4.1) .16(4.1) .16(4.1)

1047-1
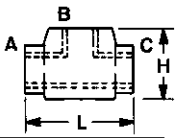

TUBE CROSS

	PORT	TUBE ID	H	L	FLOW DIAMETER
 1241-1	A B C D	.06(1.6) .06(1.6) .06(1.6) .06(1.6)	1.0(25.4)	1.0(25.4)	.05(1.3) .05(1.3) .05(1.3) .05(1.3)

1241-1
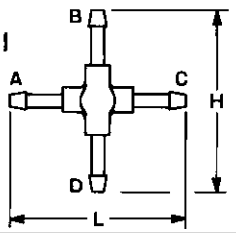

FEMALE THREAD CROSS

	PORT	FEMALE THREAD	H	L	FLOW DIAMETER
 1298-1	A B C D	10-32 UNF 10-32 UNF 10-32 UNF 10-32 UNF	.38(9.6)	.6 (15.2)	.16(4.1) .16(4.1) .16(4.1) .16(4.1)

1298-1
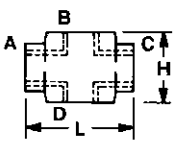

ADJUSTABLE ELBOWS - TEES

DYNAMCO

FEMALE THREAD TO MALE THD. - ELBOW

1291-1

PORT	THREAD	S	H	FLOW DIAMETER
A-Female B-Male	10-32 UNF 10-32 UNF	.3 (7.6)	.6 (15.2)	.16(4.1) .10(2.5)

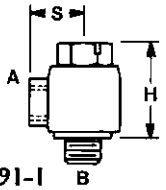

1291-1

TUBE TO MALE THREAD - ELBOW

1292-1

PORT	SIZE	S	H	FLOW DIAMETER
A-Tube ID B-Thread	.06(1.6) 10-32 UNF	.6 (15.2)	.6 (15.2)	.05(1.3) .10(2.5)

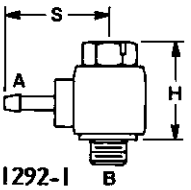

1292-1

1293-1

PORT	SIZE	S	H	FLOW DIAMETER
A-Tube ID B-Thread	.13(3.2) 10-32 UNF	.5 (12.7)	.6 (15.2)	.10(2.5) .10(2.5)

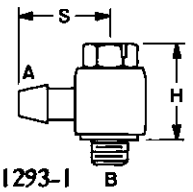

1293-1

FEMALE THREAD TO MALE THREAD - TEE

1294-1

PORT	THREAD	L	H	FLOW DIAMETER
A-Female B-Male C-Female	10-32 UNF 10-32 UNF 10-32 UNF	.6 (15.2)	.6 (15.2)	.16(4.1) .10(2.5) .16(4.1)

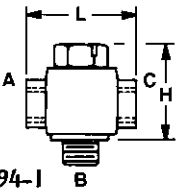

1294-1

TUBE TO TUBE TO MALE THREAD - TEE

1295-1

PORT	SIZE	L	H	FLOW DIAMETER
A-Tube ID B-Thread C-Tube ID	.06(1.6) 10-32 UNF .06(1.6)	1.1(27.9)	.6 (15.2)	.05(1.3) .10(2.5) .05(1.3)

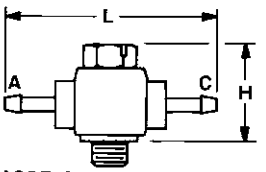

1295-1

1296-1

PORT	SIZE	L	H	FLOW DIAMETER
A-Tube ID B-Thread C-Tube ID	.13(3.2) 10-32 UNF .13(3.2)	1.0(25.4)	.6 (15.2)	.10(2.5) .10(2.5) .10(2.5)

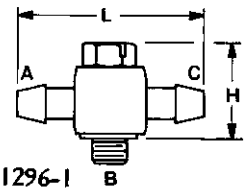

1296-1

BULKHEAD MOUNTING BLOCK

396-1

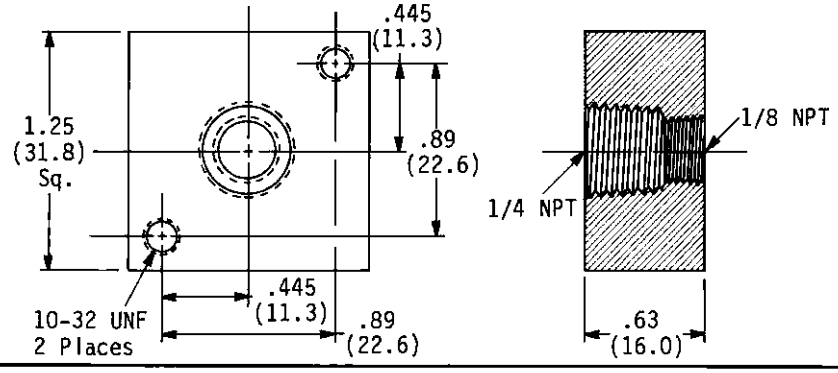

396-1

BULKHEAD CONNECTOR

399-2

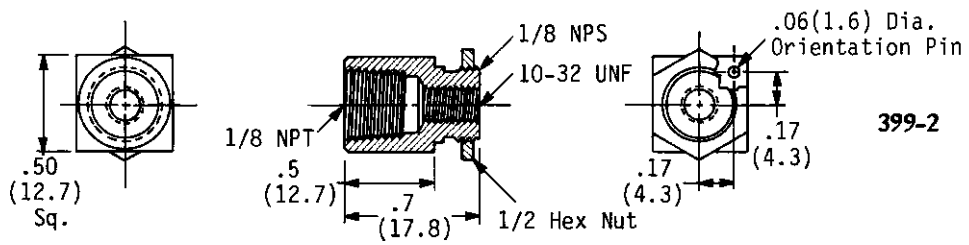

399-2

BULKHEAD HOSE ADAPTER

422-2

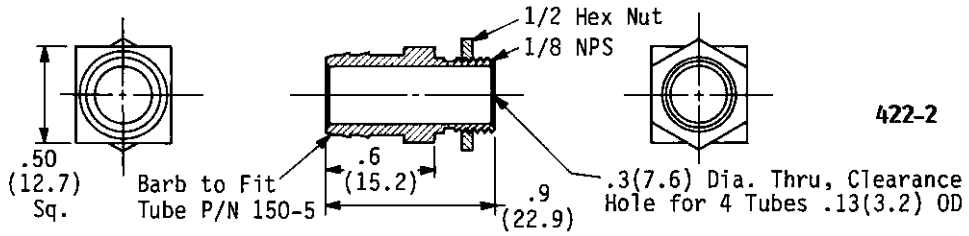

422-2

PANEL MOUNT TERMINAL BLOCK

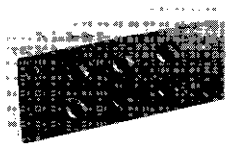

1217-1

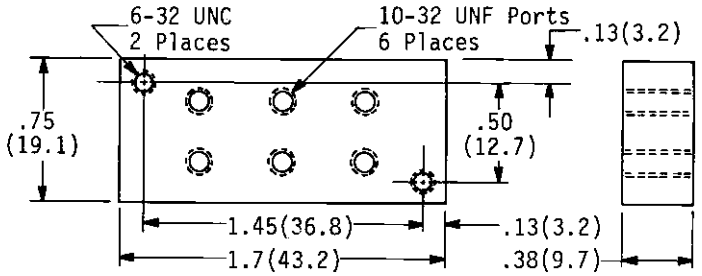

1217-1

FLUSH SEAL PLUG 1/8 NPT

506-5

PIPE NIPPLE 1/8 NPT

514-1

PIPE CAP 1/8 NPT

507-1

FLUSH SEAL PLUG 1/4 NPT

506-6

PIPE NIPPLE 1/4 NPT

514-2

PIPE REDUCER 1/4-1/8 NPT

510-1

MANIFOLDS

205-1

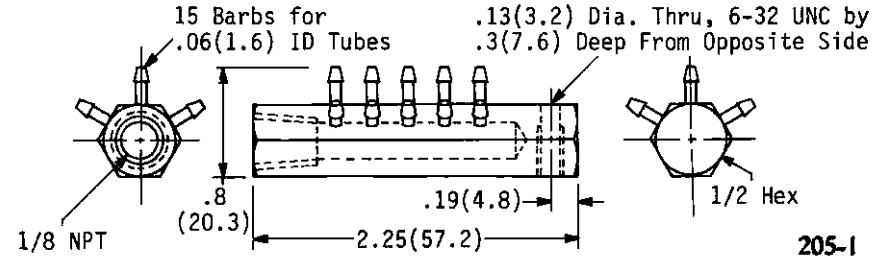

205-4

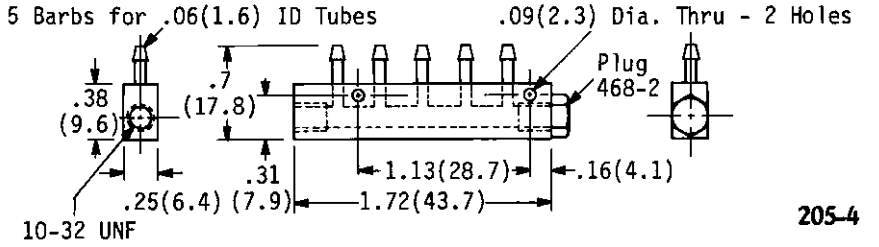

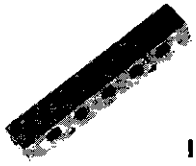

1270-1

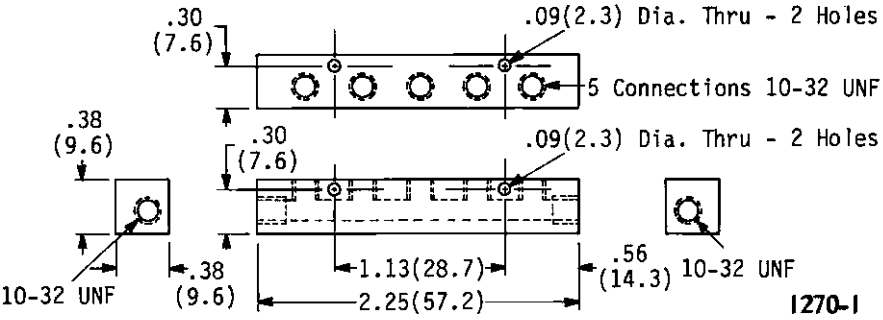

TERMINAL STRIPS

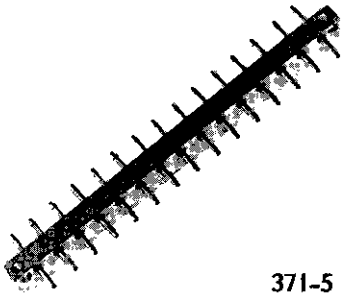

371-5

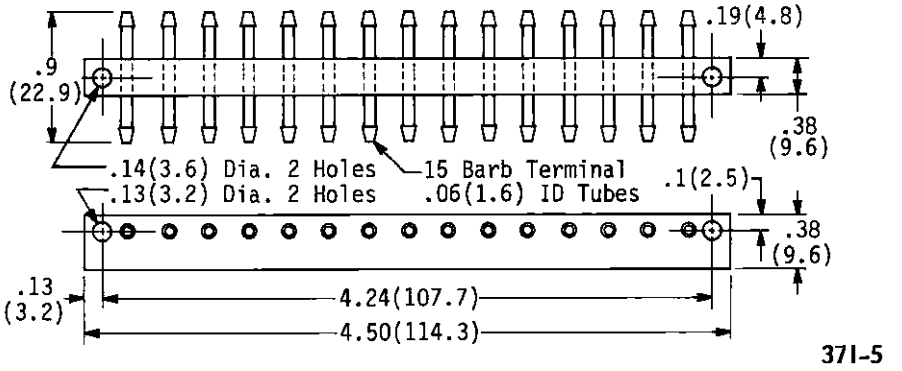

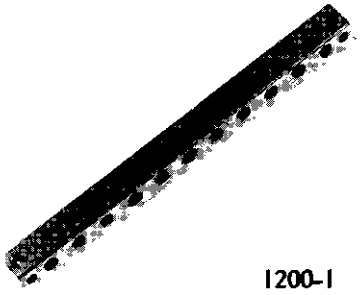

1200-1

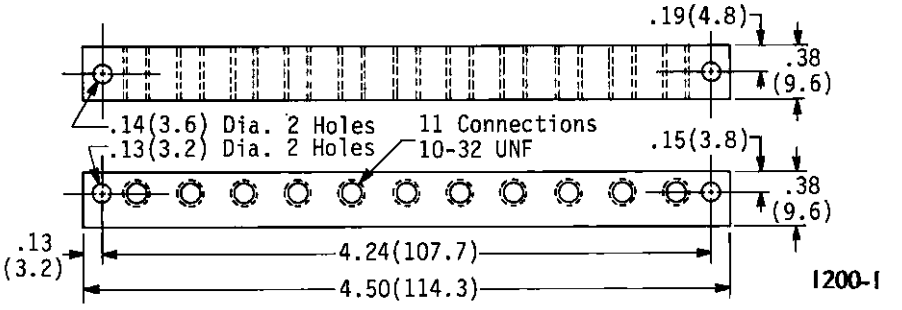

QUICK DISCONNECTS

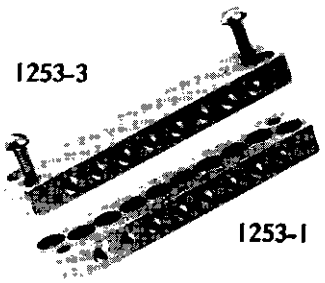

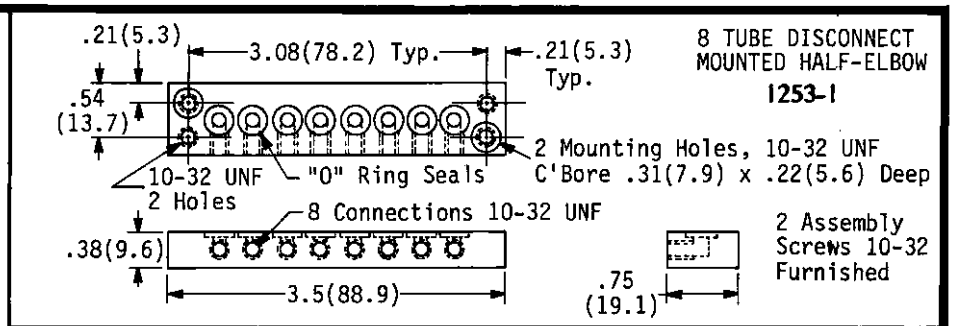

8 TUBE DISCONNECT MOUNTED HALF-ELBOW
1253-1

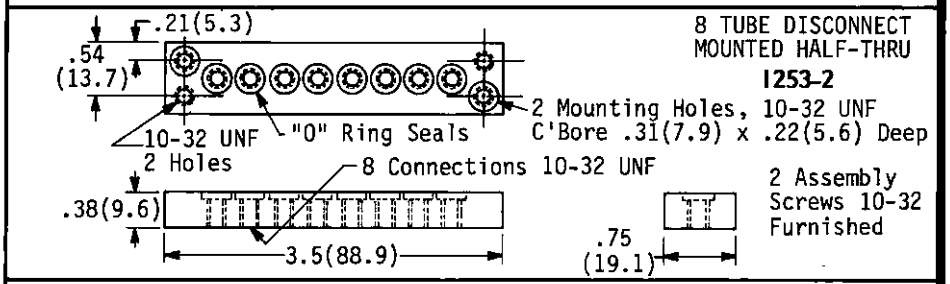

8 TUBE DISCONNECT MOUNTED HALF-THRU
1253-2

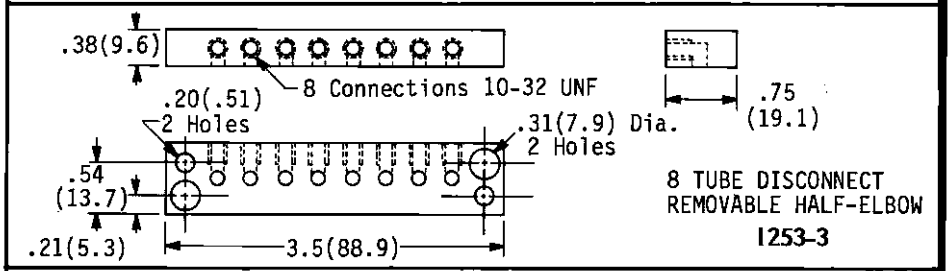

8 TUBE DISCONNECT REMOVABLE HALF-ELBOW
1253-3

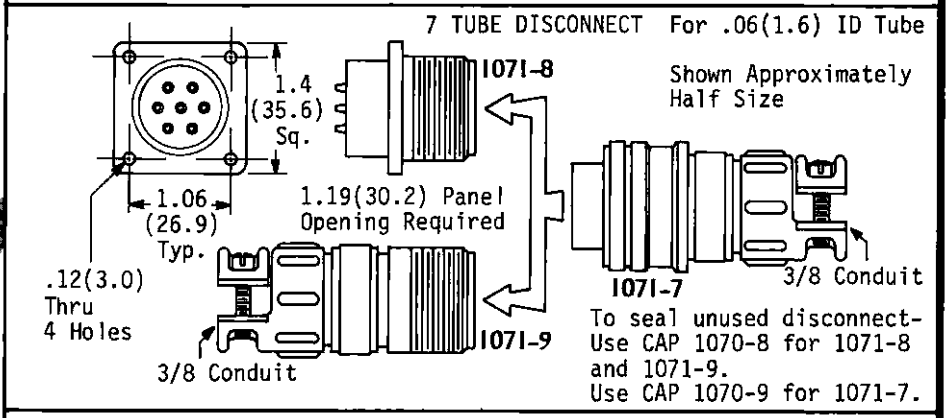

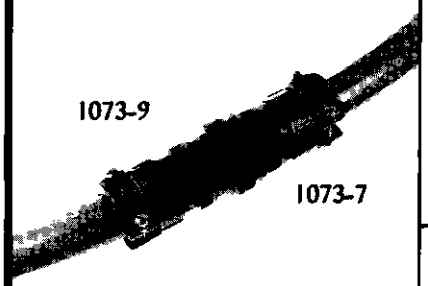

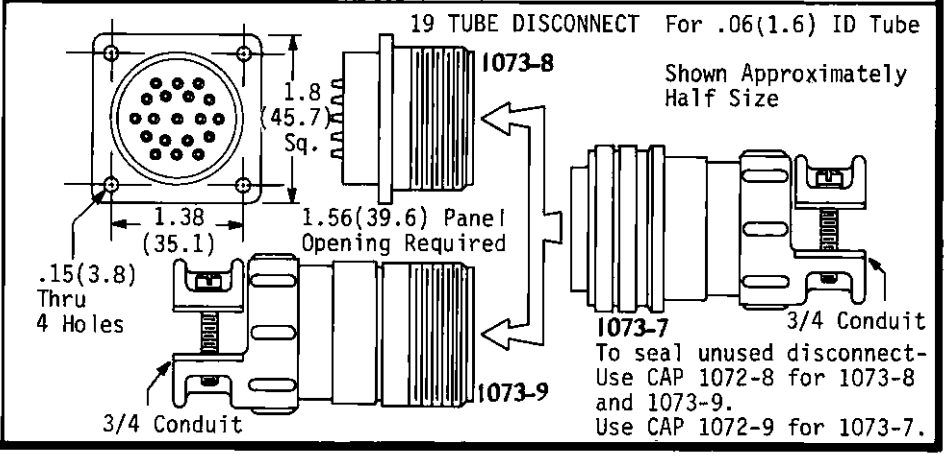

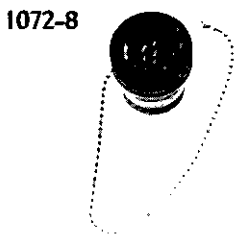

Fixed flow controls (not adjustable, are used in air logic systems to accomplish time delays. By combining a fixed flow control with a pressure sensing relay and a volume chamber, all of the timing functions of TIMING IN, TIMING OUT and TIMED PULSE can be accomplished depending upon how these components are interconnected (see Bulletin 300 for complete Time Delay information). The duration of the time period is established by selecting a fixed flow control having the correct orifice size, and then interconnecting it with a volume chamber and relay in accordance with the timing function required. The chart at the right shows the approximate time delay for a typical TIMING IN function, using various orifice sizes, a system pressure of 50 psig (3.4 bar), a VC1 volume chamber and with a spring return relay LSH1 in Curve A and a detented relay LDA1 in Curve B. Note: times shown are approximate and will vary with hardware tolerances, system pressure and type of timing function.

Although twenty-nine different sizes of orifices are available, seven (7) popular sizes have been selected as stock items. Those marked with an * in the chart below are the sizes that are normally stocked. The remainder are available on special order only.

Models FFC, panel mounted fixed flow controls, are furnished with gasket and mounting screws less baseplate (see Bulletin 300 for baseplate selection). Models IFC, in-line fixed flow controls, have a 7/16" dia. body and are .63(15.9) long with female 10-32 UNF ports either end.

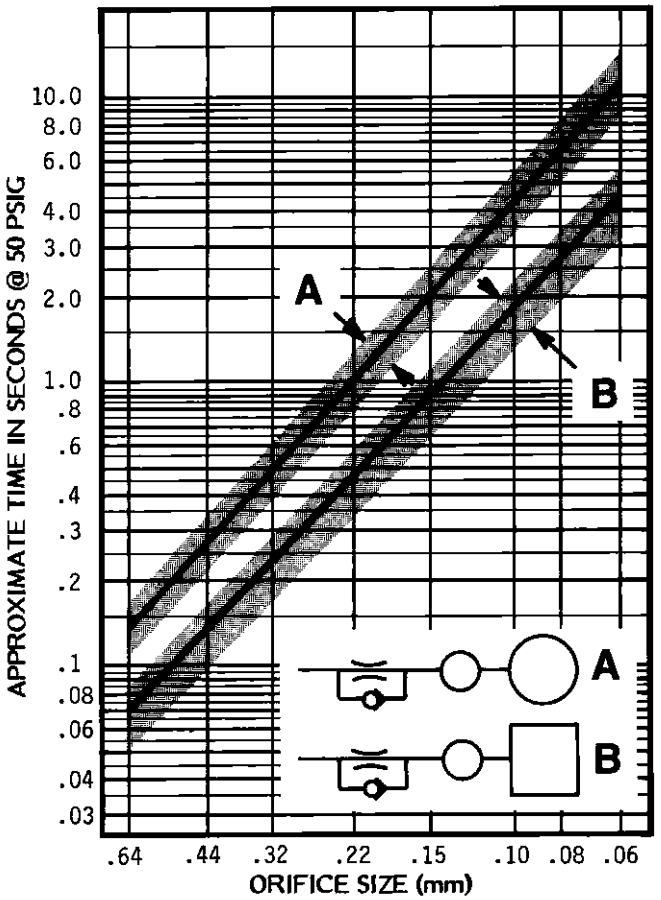

FIXED FLOW CONTROLS	FIXED FLOW CONTROL PANEL MOUNT	FIXED FLOW CONTROL IN LINE	ORIFICE SIZE
	FFC060	IFC06	.06mm .0024in
	FFC070	IFC07	.07mm .0028in
	FFC080*	IFC08*	.08mm .0031in*
	FFC090	IFC09	.09mm .0035in
	FFC100*	IFC10*	.10mm .0039in*
	FFC110	IFC11	.11mm .0043in
	FFC120	IFC12	.12mm .0047in
	FFC130	IFC13	.13mm .0051in
	FFC140	IFC14	.14mm .0055in
	FFC150*	IFC15*	.15mm .0059in*
	FFC160	IFC16	.16mm .0063in
	FFC170	IFC17	.17mm .0067in
	FFC180	IFC18	.18mm .0071in
	FFC200	IFC20	.20mm .0079in
	FFC220*	IFC22*	.22mm .0087in*
	FFC240	IFC24	.24mm .0094in
	FFC260	IFC26	.26mm .0102in
	FFC280	IFC28	.28mm .0110in
	FFC300	IFC30	.30mm .0118in
	FFC320*	IFC32*	.32mm .0126in*
	FFC340	IFC34	.34mm .0134in
	FFC360	IFC36	.36mm .0142in
	FFC400	IFC40	.40mm .0157in
	FFC440	IFC44	.44mm .0173in
	FFC480*	IFC48*	.48mm .0189in*
	FFC520	IFC52	.52mm .0205in
	FFC540	IFC54	.54mm .0213in
	FFC580	IFC58	.58mm .0228in
	FFC640*	IFC64*	.64mm .0252in*

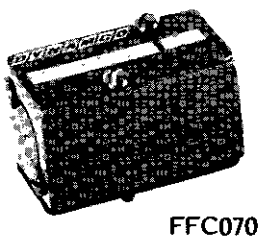
FFC070


IFC32

Restrictors are used in air logic circuits where the flow of air is to be reduced. Common useage examples for fixed flow restrictors are in back pressure sensing circuits, proximity and air jet position sensing circuits, in dynamic flow circuits to reduce pressure, and any other application where the flow needs to be restricted.

Although twenty-nine different sizes of orifices are available, seven (7) popular sizes have been selected as stock items. Those marked with an * in the chart below are the sizes that are normally stocked. The remainder are available on special order only.

Models RF1, connector restrictors, have a male 10-32 UNF thread to barb for .06(1.6) ID x .13(3.2) OD tube. The body is 1/4" hex and the overall length is .6(15.2).

Models RF2, union restrictors, have a barb on either end for .06(1.6) ID x .13(3.2) OD tube. The body is .16(4.1) square, and the overall length is .6(15.2). The curves at the right show the approximate standard gas flow through various sizes of orifices at a constant upstream pressure of 50 psig.

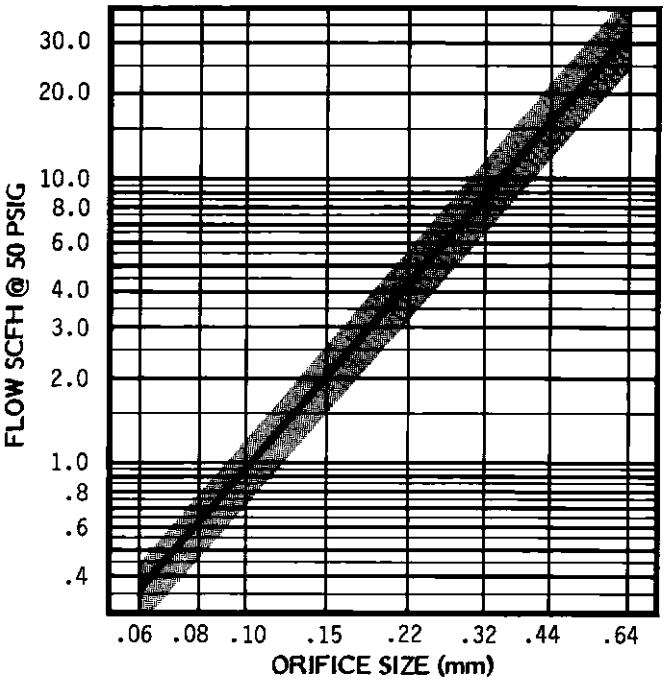

RESTRICTOR FITTINGS	RESTRICTOR-CONNECTOR MALE THREAD TO TUBE	RESTRICTOR-UNION TUBE TO TUBE	ORIFICE SIZE
 RF107	RF106	RF206	.06mm .0024in
	RF107	RF207	.07mm .0028in
	RF108*	RF208*	.08mm .0031in*
	RF109	RF209	.09mm .0035in
	RF110*	RF210*	.10mm .0039in*
	RF111	RF211	.11mm .0043in
	RF112	RF212	.12mm .0047in
	RF113	RF213	.13mm .0051in
	RF114	RF214	.14mm .0055in
	RF115*	RF215*	.15mm .0059in*
	RF116	RF216	.16mm .0063in
	RF117	RF217	.17mm .0067in
	RF118	RF218	.18mm .0071in
	RF120	RF220	.20mm .0079in
	RF122*	RF222*	.22mm .0087in*
	RF124	RF224	.24mm .0094in
	RF126	RF226	.26mm .0102in
	RF128	RF228	.28mm .0110in
	RF130	RF230	.30mm .0118in
	RF132*	RF232*	.32mm .0126in*
 RF208	RF134	RF234	.34mm .0134in
	RF136	RF236	.36mm .0142in
	RF140	RF240	.40mm .0157in
	RF144*	RF244*	.44mm .0173in*
	RF148	RF248	.48mm .0189in
	RF152	RF252	.52mm .0205in
	RF154	RF254	.54mm .0213in
	RF158	RF258	.58mm .0228in
	RF164*	RF264*	.64mm .0252in*
RESTRICTOR KITS	CONNECTOR KIT	UNION KIT	QUANTITY OF EACH ORIFICE SIZE
	RFK11	RFK21	1
	RFK12	RFK22	2
	RFK13	RFK23	3
	RFK14	RFK24	4
	RFK15	RFK25	5

CHECK VALVE PANEL MOUNTED

Panel Mounted Check Valve 1433-0 furnished with mounting screws and gasket. Order baseplate 187-2, 189-2, 1167-1 or 1173-1 separately. See Bulletin 300 for baseplate details. Free flow from A to 1, checked flow from 1 to A.

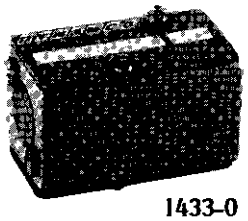

1433-0

CHECK VALVE IN-LINE

In-line Check Valve 1375-2 provides free flow one direction, checked flow in the opposite direction as indicated by symbol on side of valve. Female 10-32 UNF ports either end. Overall length .63(16.0), 7/16" diameter body.

1375-2

PLUG 10-32 UNF

Plug for sealing unused 10-32 UNF ports in manifolds, fittings, etc. Plug 468-2 has the 10-32 thread seal preassembled and captivated to assure positive sealing with mechanical stop for metal to metal draw down. Overall length of plug is .27(6.9), 1/4 hex head.

468-2

LEGEND PLATES PRESSURE SENSITIVE

1 Inscription Line
5 characters per line

2 Inscription Lines
15 charaters per line

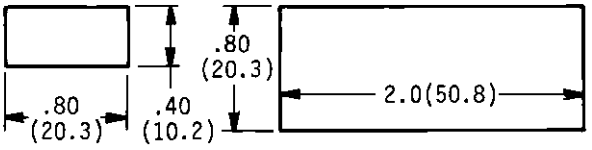

307-6 307-7

BARB CAP .06(1.6) ID TUBE

Barb cap to close off unused barbs in manifolds, fittings, etc. To use the barb cap simply push the cap over the barb. Pull in line with the barb to remove cap. Cap may be reused. Overall length of barb cap is .6(15.2).

380-2

TUBE TIES

Tube ties 554-3 provide a convenient way to bundle tubing into a harness. Just wrap the nylon tie around the tubes, insert the free end of the tie into its head and pull tight. 554-3 consists of an assortment of 40 small ties (bundles to 3/4" diameter) and 10 large ties (bundles to 1¼" diameter).

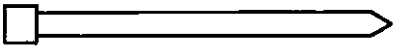

554-3

TUBE BARB .06(1.6) ID TUBE

Custom barb installation requires a close tolerance .073(1.85) hole. Apply Loctite RC40 to the barb shank along the chamfer. Caution - keep air passage free of Loctite. Press or tap barb shank into hole to a depth of .15(3.8). Bake assembly 1 hour at 200°F. Overall length of barb is .43(10.9).

186-2

TUBE NUMBERS

Tube number book 553-1 contains 10 full size (20 half size) wraparound markers of each number from 1 thru 45. Book 553-2 contains numbers from 46 thru 90. 10 square cut markers of each number for use on flat surfaces are also provided.

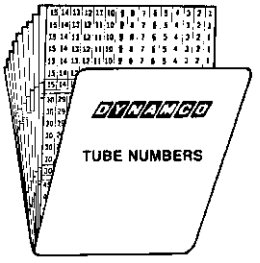

Numbers 1-45 **553-1** Numbers 46-90 **553-2**

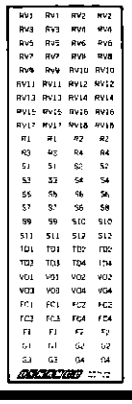

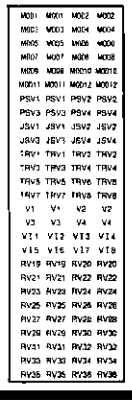

COMPONENT IDENTIFICATION MARKER

Component identification markers 423-1 and 423-2 are precut, vinyl coated, pressure sensitive labels used to identify components in an air logic control system. The panel component markers, 423-1, contains preprinted identifiers for relays, shuttles, Program-Air, timers and many other items found inside control enclosures. Pushbuttons, limits, etc. markers, 423-2, contains preprinted identifiers for manual, mechanical and electric actuated devices, power valves and other control related components. Each set also contains a blank sheet of labels for establishing your own special identifiers as required.

423-1 Panel Components Pushbuttons, Limits, etc. **423-2**

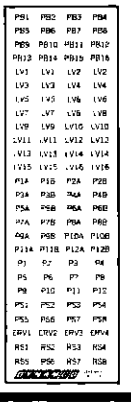

Primary Filter

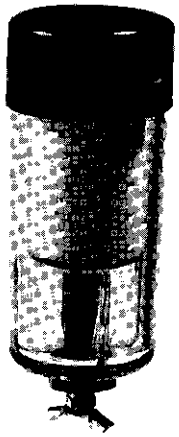

FP3* PRIMARY FILTER WITH MANUAL DRAIN

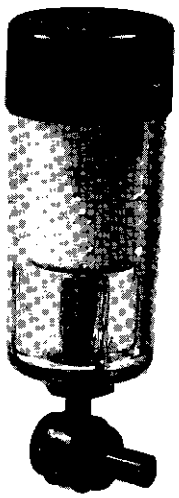

FP31* PRIMARY FILTER WITH "POWER-PULSE" DRAIN VALVE

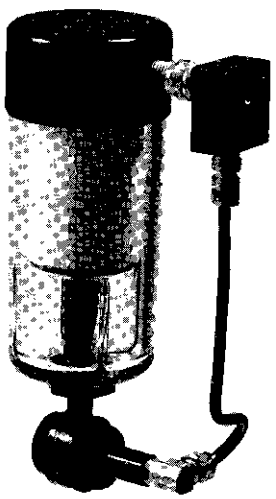

FP32* PRIMARY FILTER WITH "POWER-PULSE DRAIN SYSTEM

ABOUT CLEAN AIR

The technology of high-reliability air controls (both MPL and fluidics) is based upon those controls receiving clean, dry, oil-free air. It is quite practical and economically sound to remove all entrained water droplets (condensate) and all undesirable compressor oil aerosols by employing typical industrial components, some simple tricks of thermodynamics, *PLUS* a relatively new kind of oil-removing filter called a "coalescing" filter.

Coalescing filters employ a cartridge composed of a mat of extremely fine fibers (about 0.5 micrometers in diameter) matted so closely that they will remove solid particles down to 0.1 micrometers in size. As the air stream flows through the fibers, very fine oil droplets down to 0.05 micrometers are attracted to the fibers by a mass attraction phenomenon called "Van der Waals forces." They collect on the fibers, but do not soak into them. As more and more oil collects, it forms large oil droplets which drip off the outer surface of the cartridge (air flow is from inside out) and collect in the bowl.

IMPORTANT NOTE

As long as the bowl is kept drained, a coalescing filter will continue to remove oil and other liquids *INDEFINITELY*. Eventually the cartridge will become plugged with dirt particles, but when this happens you simply stop getting sufficient air. It is fail safe, and you install a new cartridge and resume normal operations.

DYNAMCO'S OIL REMOVING COALESCING PRIMARY FILTER WITH ¼" NPT PORTS AND 15 SCFM AIR CAPACITY

is a high-efficiency coalescing filter capable of producing clean, oil-free air suitable for use in MPL, fluidic or pneumatic instrumentation systems. An optional mounting bracket can be installed to provide left-to-right flow or right-to-left flow. Placards on both sides of filter indicate direction of air flow. All metal parts exposed to air flow are aluminum alloy, brass, or stainless steel.

Air enters the inlet port and passes down the center bore of the filter cartridge and flows from inside to outside. Dirt particles are trapped inside the cartridge. A mat of ultra-fine glass fibers coalesces the oil aerosols into liquid oil and these oil drops emerge through an outer barrier and drip down into the bowl.

MANUAL DRAIN

A manual drain is adequate in applications where the filter is needed only to remove solid particles since liquids and vapors are non-existent.

"POWER-PULSE" DRAIN VALVE

is an open center poppet valve, air pilot operated and spring returned. It is blocked in both energized and de-energized positions. When a pilot signal is applied to the control port (⅛ NPT) the valve will shift, momentarily venting the bowl to atmosphere as it goes across center. Later, when the control port is exhausted, the valve will shift back again momentarily venting the bowl. Note, a pilot signal of 40 psig is adequate for bowl pressures up to 120 psig.

"POWER-PULSE" DRAIN SYSTEM

The *DYNAMCO* primary filter and "Power-Pulse" drain valve are coupled into a *system* for manifold mounting to a control cabinet or other flat surface. The system is an integrated unit consisting of the filter (with choice of bowl type), the "Power-Pulse" drain valve, a manifold mounting block and the connecting lines.

DRAIN LINE

A ⅛ NPT port is provided on the "Power-Pulse" drain for attaching a line which will direct the discharged liquids to a convenient place and muffle the discharge.

BOWL SELECTION

The DYNAMCO primary filter can be ordered with a polycarbonate bowl, a polycarbonate bowl and bowl guard, or a metal bowl.

***SHOWN WITH BOWL GUARD 1044-3 REMOVED.**

MAXIMUM OPERATING PRESSURE 150 PSIG
MAXIMUM OPERATING TEMPERATURE +130°F

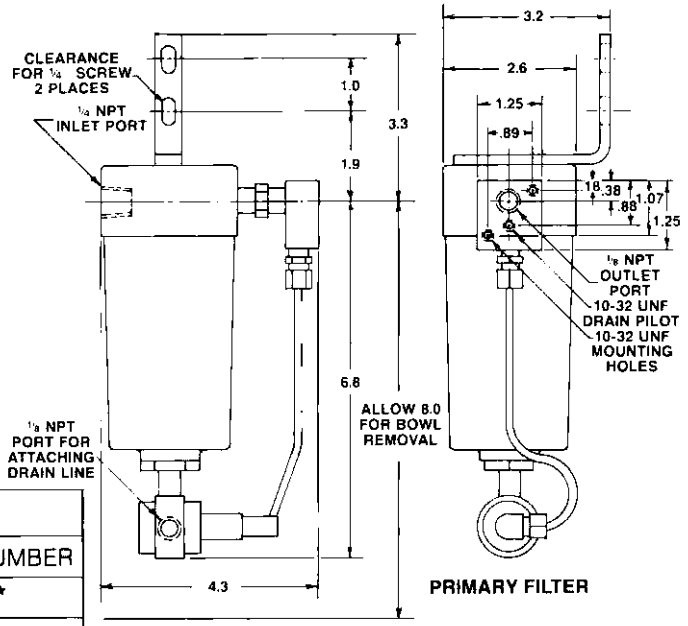

PRIMARY FILTER

Part No.	Description
1044-2	Replacement Element
1044-3	Bowl Guard
1044-4	Metal Bowl*
1044-6	Mounting Kit (Bracket and Screws)
1045-2	"Power-Pulse" Drain Valve
1045-3	Manifold Mounting Block and Piping Assembly

PRIMARY FILTER ORDER NUMBERS		
TYPE OF DRAIN	TYPE OF BOWL	MODEL NUMBER
Manual	Polycarbonate	FP2*
	Polycarbonate & Bowl Guard	FP3
	Metal	FP4*
"Power-Pulse" Drain Valve	Polycarbonate	FP21*
	Polycarbonate & Bowl Guard	FP31
	Metal	FP41*
"Power-Pulse" Drain System (Manifold Mount)	Polycarbonate	FP22*
	Polycarbonate & Bowl Guard	FP32*
	Metal	FP42*

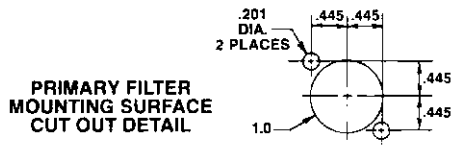

PRIMARY FILTER MOUNTING SURFACE CUT OUT DETAIL

MINIATURE PRIMARY FILTER

1203-2
1/4 NPT In-line Coalescing Filter

1203-5
Replacement Element Miniature Coalescing Filter

Secondary Filter

DYNAMCO's secondary filter is an oil-absorbing filter. It should be located *downstream* of a regulator which in turn should be located *downstream* of the primary filter. It provides final filtration to catch any oil or water condensed out by the regulator. It also serves as a safety filter and as a visual indicator of the condition of incoming air. It also acts as a surge tank to level out peak demands for air. Note, any contamination in the secondary indicates that the elements in both the primary and secondary filters need changing.

SECONDARY FILTER ORDER NUMBERS	
Secondary Filter complete with panel mounting plate	FS1
Secondary Filter less mounting plate	FS0
Replacement Element	417-1
Panel Mounting Kit (Plate and Screws)	397-2

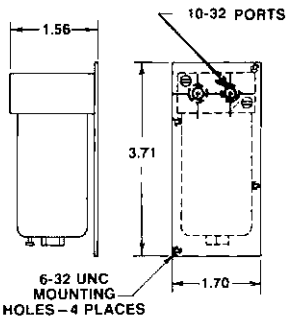

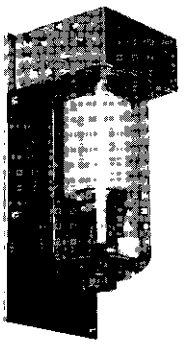

SECONDARY FILTER FS1

*METAL BOWLS AND POLYCARBONATE BOWLS WITHOUT BOWL GUARDS NO LONGER AVAILABLE.

Regulators

In order to operate at a consistent speed, emit consistent signals and obtain a consistent response, an air control system must be supplied with a constant air pressure. This is the function of the Pressure Regulator which is also known as a "Pressure Reducing Valve."

The term, "Pressure Reducing Valve," is the more accurate of the two as the regulator cannot amplify pressure, only reduce it. It can therefore only function as a "regulator" when its output is below the input pressure and it maintains a constant pressure downstream by constantly reducing the input pressure.

A Dynamco Air Control System will normally function on pressures from 20 to 100 PSIG so the purpose of the regulator is to maintain a supply of air within this pressure range, but which is below any pressure drops experienced in the main air line.

Most industrial plants can maintain a steady supply of air at 70 PSIG and control systems are operated at 5 to 10 PSIG below this.

An air control system makes unusual demands of a pressure regulator in that the fluctuations of pressure are far more rapid yet involve far less flow than is normally experienced. It is more important that the regulator respond to the flow rapidly as a pressure drop in the system will immediately affect any timing or signal response. As the pressure demands may vary from cycle to cycle, there is no way of setting up a "pattern" or otherwise compensating for a pressure drop. The regulator must keep pace with it.

In an air control system, regulators are also used to furnish "bucking"air pressures to pressure sensing valves, in which case they are "dead ended," with practically no air flow, but required to sustain a very accurate pressure. They are also used to supply jet sensors or to reduce the control system pressure for signals to other instruments.

Pressure Regulators supplied by Dynamco have been carefully selected to respond to these conditions. They are panel-mounted and are furnished complete with a mounting bracket for attachment to the control panel. They are available with three spring options.

MAXIMUM OPERATING PRESSURE 100 PSIG

MAXIMUM OPERATING TEMPERATURE +130°F

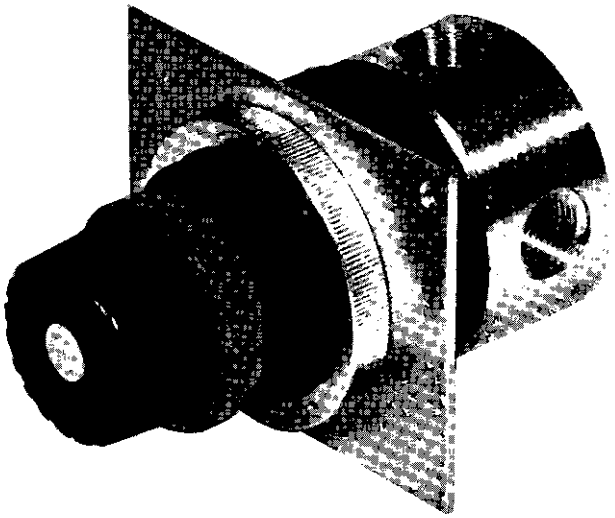

R11	100 PSIG MAX
R13	10 PSIG MAX

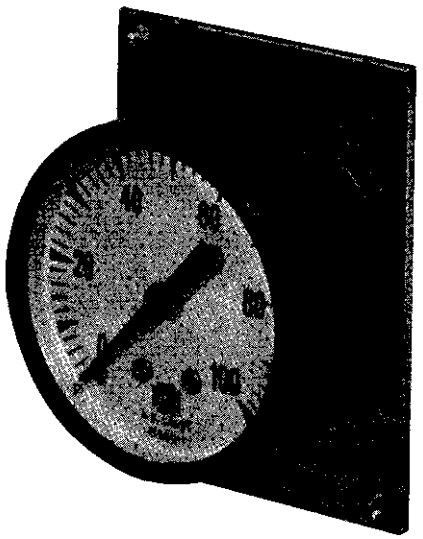

G11	100 PSIG
G13	30 PSIG

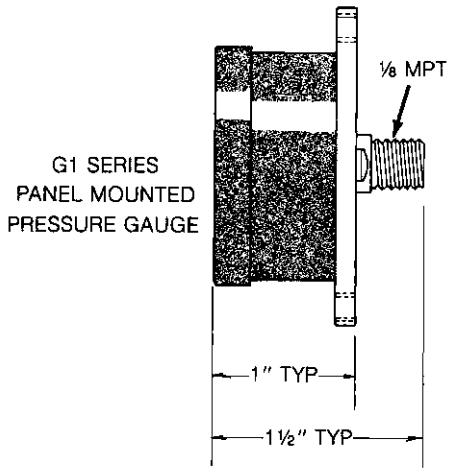

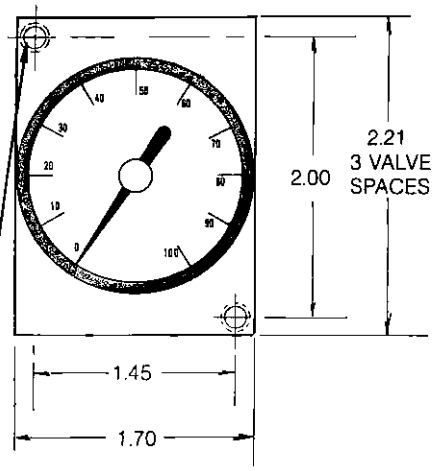

MOUNTING HOLES 6-32 UNC TAP THRU
AND CLEARANCE FOR #4 MACHINE SCREW.
2 HOLES

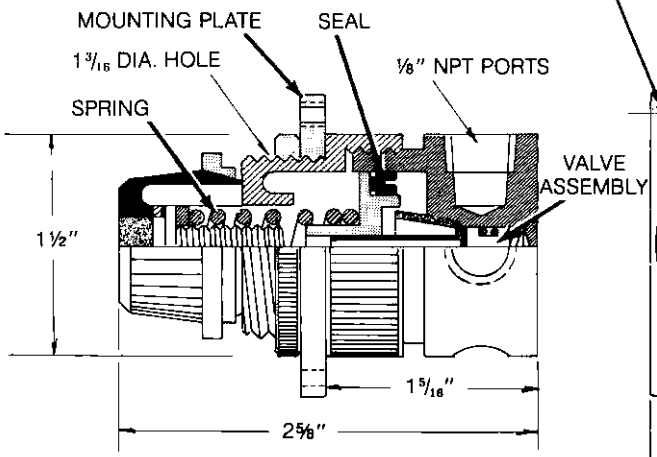

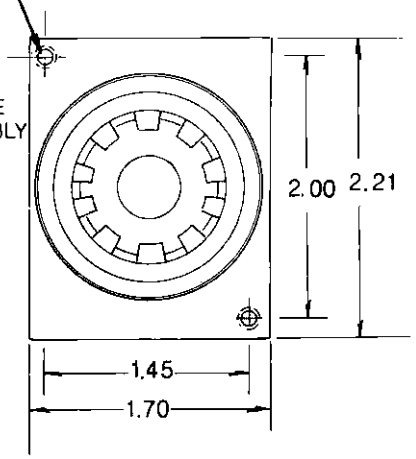

R1 SERIES—PANEL MOUNTED
REGULATORS

TYPICAL POWER SUPPLY

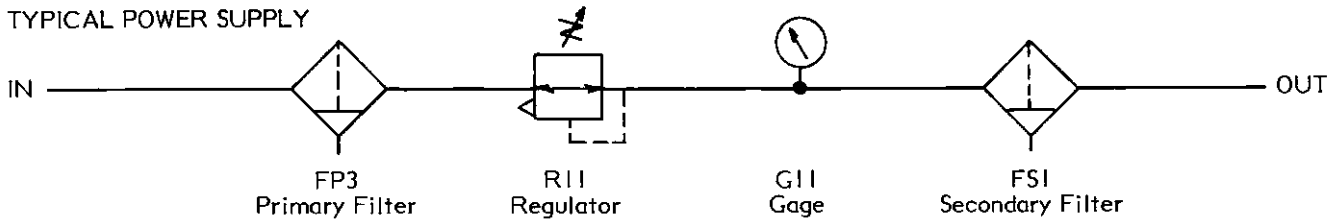

MODEL LUA*-Amplifier Valve-Air Bias
LUD*-Amplifier Valve-Detented
LUF*-Amplifier Valve-Spring Returned
LUK*-Amplifier Valve-Spring Returned
* 0 - Without Base
1 - 1/16 Barb Base, Bottom
2 - 1/16 Barb Base, Side
4 - 10-32 UNF Base, Bottom
5 - 10-32 UNF Base, Side

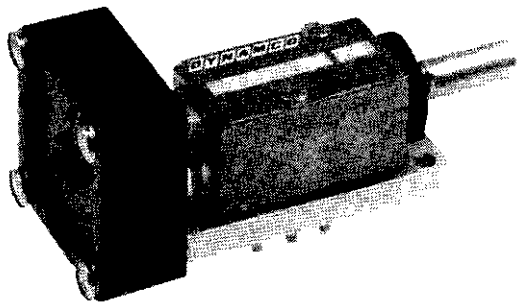

LUF1

MODEL SELECTION
Each Amplifier Valve Model is designed to satisfy a particular application. See TYPICAL SENSOR APPLICATIONS starting on page 11 for recommended circuits.

SPECIFICATIONS
Models LUA0, LUD0, LUF0 and LUK0 furnished with gasket and mounting screws. Other models furnished mounted to baseplate.

TEMPERATURE RANGE
+32° to +200° (0 to 93°C) Maximum Range. Caution -- At lower temperatures, the dew point of the air supply must be lower than the lowest operating temperature to prevent icing. At high temperatures, DYNAMCO polyurethane tubing is not recommended above 130°F at 50 psig.

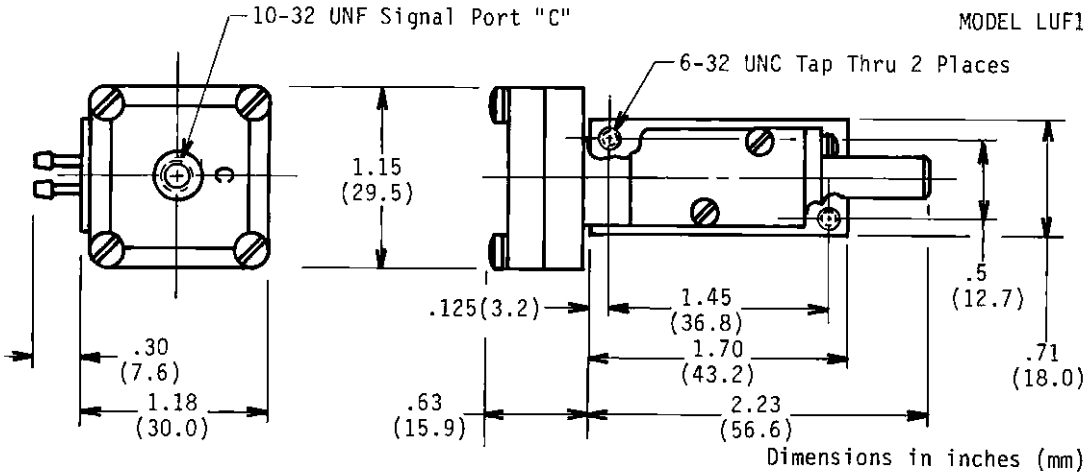

Model 1051-3 Proximity Sensor

DESCRIPTION
Model 1051-3 Proximity Sensor is a focused air jet sensor used to sense objects that come within the proximity of it's face without contacting the face of the sensor. It provides a positive output signal when an object enters it's target area. This proximity sensor is normally used with the LUF series of Amplifier valves. See TYPICAL SENSOR APPLICATIONS page 11 for recommended circuit.

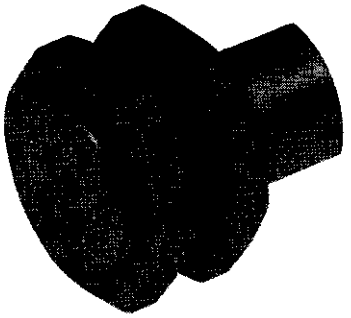

1051-3

SPECIFICATIONS
Proximity Sensor 1051-3 can be conveniently mounted using Angle Bracket 2202-1. The sensor may also be custom-mounted using an 11/16 - 24 UNEF threaded hole or through any bracket (¼ inch max. thickness) hole (.69 diameter) using the two hex nuts on either side of bracket to hold the sensor in position.

OPERATING CHARACTERISTICS
3 to 10 psig (.2 to .7 bar) Maximum Range Supply Pressure.
.36 SCFM air consumption at 10 psig.
Typical output pressure with target .15 inches (3.8mm) in front of face with 10 psig supply equals 6 inches of H_2O.
Minimum target recognition:

Flat bar	.25 (6.4mm) wide
Round bar	.63 (16mm) dia.
Hole size	.13 (3.3mm) dia.

OPERATION
A supply pressure causes three air jets to converge at a focused point in front of the sensor's face in a cone shape. The pressure at the receiver port which is connected to the output port is approximately atmospheric. When a target enters this cone shaped jet area, the pressure increases at the receiver port (output) depended on the distance from the sensor's face to the target and the angle of the target with respect to the sensor's face.

DISCONTINUED

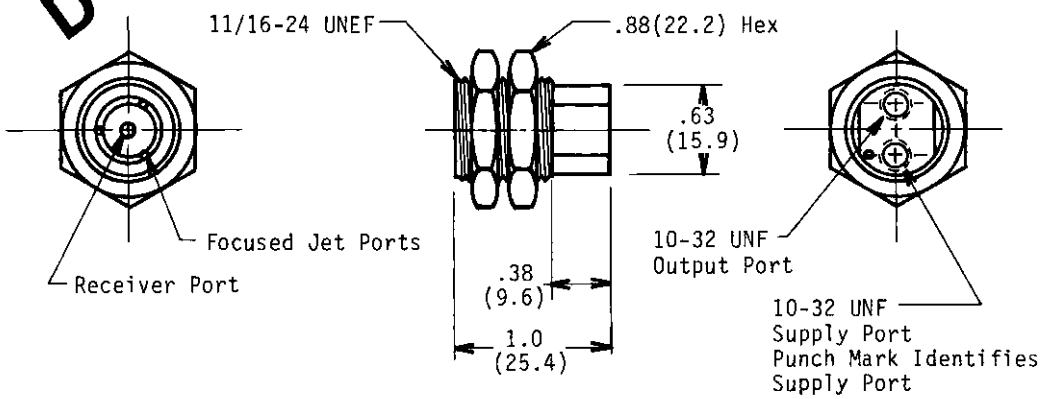

Norgen
4JS-020-D00

MODEL 2200-1 Interruptable Jet Sensor

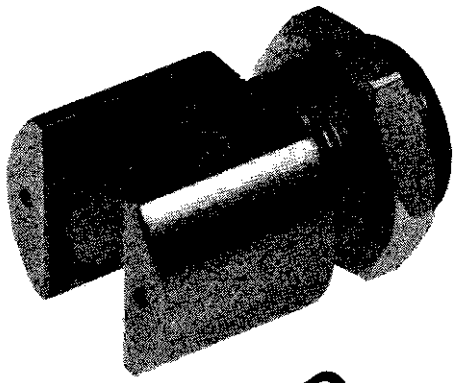

2200-1

DISCONTINUED

DESCRIPTION
Model 2200-1 Interruptable Jet Sensor is a gap sensor with an air jet sender on one side of the gap and a receiver on the other. The Interruptable Jet Sensor senses objects when the object interrupts the air jet communication between sender and receiver. This sensor is normally used with the LUF Series of Amplifier Valves. See TYPICAL SENSOR APPLICATIONS page 12 for recommended circuit.

SPECIFICATIONS
The Interruptable Jet Sensor can be conveniently mounted using Angle Bracket 2202-1. Sensor may also be custom-mounted using an 11/16 - 24 UNEF threaded hole or through a bracket (7/16 inch max. thickness) with a .69 diameter hole.

OPERATING CHARACTERISTICS
3 to 10 psig (.2 to .7 bar) Maximum Range Supply Pressure.
.16 SCFM Air consumption at 10 psig.
Typical recovery (output) equals 5% of supply pressure.
Target recognition:

Minimum object size	.09 (2.3mm)
Maximum object size	.5 (12.7mm)

OPERATION
A supply pressure causes a jet of air to bridge the ½ inch gap causing a positive pressure at it's receiver port which provides a signal at the output port. When a target enters the air jet between sender and receiver, the pressure at the output drops to approximately atmospheric pressure. NOTE: A small portion of the supply pressure is internally metered into the receiver-output section to minimize build-up of potential contamination in the output signal port.

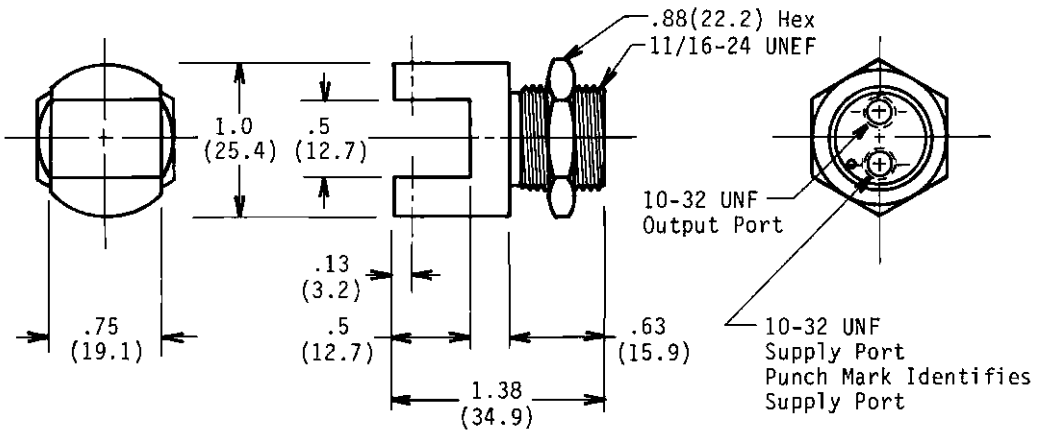

MODEL 2201-1 Emitter Jet

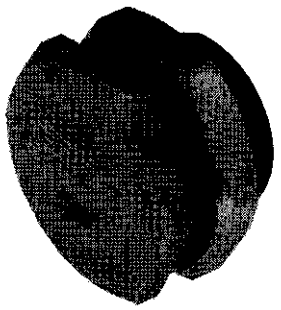

2201-1

DISCONTINUED

DESCRIPTION
Model 2201-1 Emitter Jet is a .04 (1.0) dia. orifice or nozzle which emits a jet of air when provided with a supply pressure. The Emitter Jet can be used as the sensing orifice in back pressure sensing circuits or can be used in conjunction with Model 2200-1 Interruptable Jet Sensor to increase the gap sensing distance. See TYPICAL SENSOR APPLICATION page 12 for recommended circuit.

SPECIFICATIONS
The Emitter Jet can be conveniently mounted using Angle Bracket 2202-1. The Jet may also be custom-mounted using an 11/16 - 24 UNEF threaded hole or through a bracket (5/16 inch max. thickness) with a .69 dia. hole.

OPERATING CHARACTERISTICS
0 to 10 psig (0 to .7 bar) Maximum Range Supply Pressure.
.45 SCFM air consumption at 10 psig.
Maximum practical sensing gap between Model 2200-1 and Emitter Jet Model 2201-1 is 6 inches (150mm).

OPERATION
When used in conjunction with Model 2200-1 Interruptable Jet Sensor to increase the gap sensing distance, the Emitter is positioned so that it's air jet is directed to intersect the air jet between the sender and receiver of the Interruptable Jet Sensor. The supply pressure to the Emitter must be great enough to maintain the Interruptable Jet Sensor in the interrupted condition (output at atmospheric pressure).

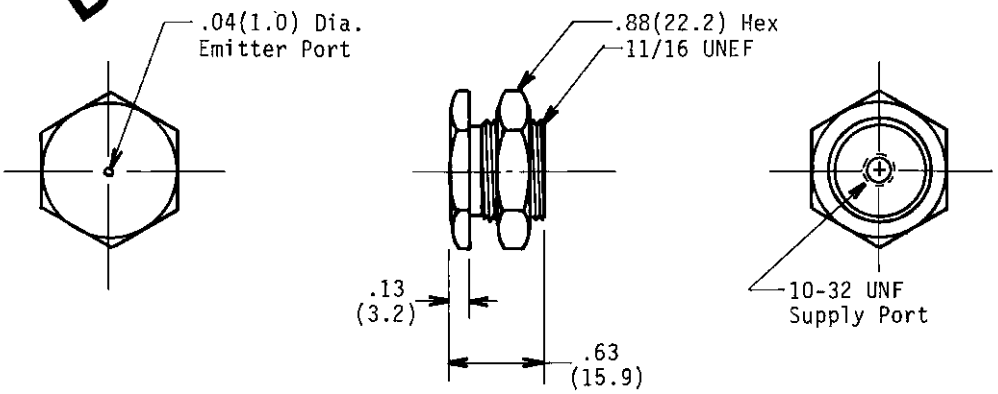

MODEL 1456-2 Needle Reader Jet Sensor

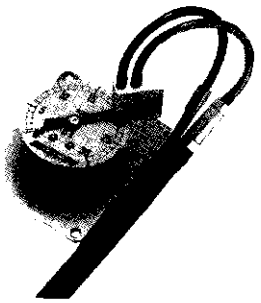

1456-2

Shown in typical operating position (Model G13 Gage, with case removed)

DESCRIPTION
Model 1456-2 Needle Reader Jet Sensor is a gap sensor with an air jet sender on one side of the gap and a receiver on the other. The Needle Reader senses an object when the object interrupts the air jet communication between sender and receiver. The Needle Reader is designed for applications where movement of a needle or a pointer, from a gage or other similar type of analog device, passes the fixed location of the Needle Reader and interrupts the air jet. This sensor is normally used with the LUF Series of Amplifier Valves. See TYPICAL SENSOR APPLICATIONS page 12 for the recommended circuit.

SPECIFICATIONS
The Needle Reader can be mounted by positioning the mounting slot over a rail or angle bracket and securing it in position with a locking screw. The Needle Reader also is provided with 4-40 UNC threaded holes for mounting to a custom bracket.

OPERATING CHARACTERISTICS
0 to 1 psig (0 to .1 bar) Maximum Range Supply Pressure.
.06 SCFM air consumption at .15 psig.
Typical recovery (output) equals 80% of supply.

OPERATION
A supply pressure causes a jet of air to bridge the .13 inch gap causing a positive pressure at it's receiver port which provides a pressure signal at the output port. When a target interrupts the air jet between sender and receiver, the pressure drops to approximately atmospheric pressure.

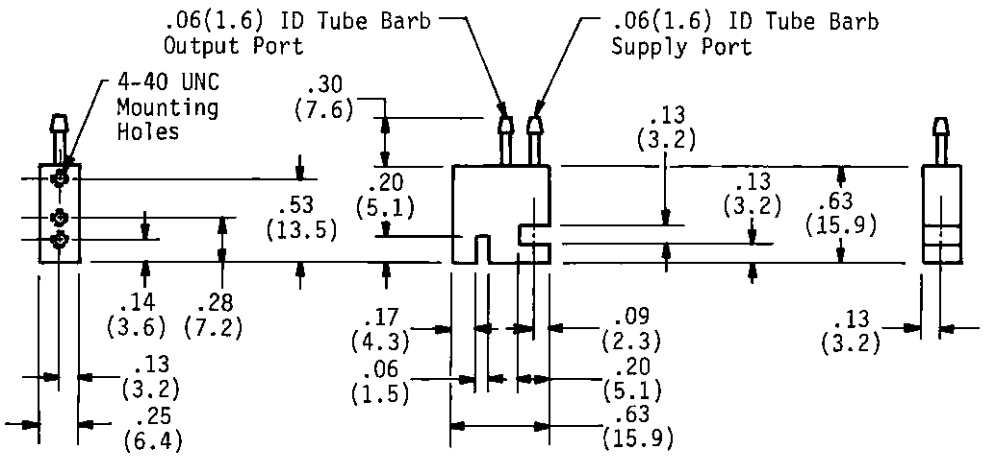

MODEL 2203-1 Whisker Valve

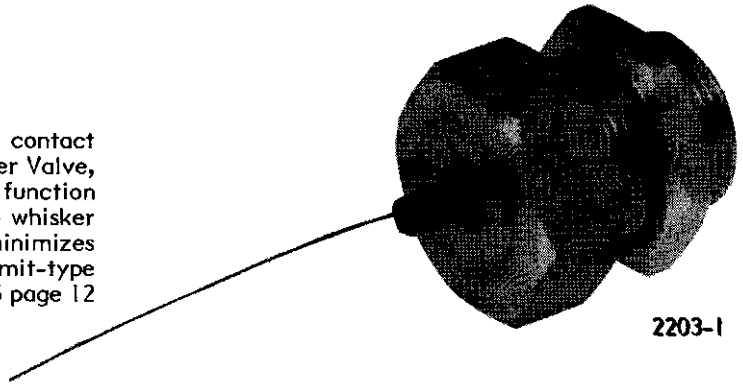

DESCRIPTION
Model 2203-1 Whisker Valve is a low force contact sensor. When used with the LUK Series Amplifier Valve, the Whisker Valve provides a position sensing function similar to a limit valve. The flexibility of the whisker actuator allows a wide latitude in position and minimizes the overstroke problem common to most limit-type devices. See TYPICAL SENSOR APPLICATIONS page 12 for recommended circuit.

SPECIFICATIONS
The Whisker Valve can be conveniently mounted using Angle Bracket 2202-1. The valve may also be custom-mounted using an 11/16 - 24 UNEF threaded hole or through a bracket (7/16" Max. thickness) with a .69 diameter hole.

OPERATING CHARACTERISTICS
3 to 10 psig (.2 to .7 bar) Maximum Range Supply Pressure.
.05 SCFM air consumption at 10 psig.
.1 in-oz torque, typical operating force.
20° deflection required for full output signal.

OPERATION
In a normal (not actuated) position, the supply pressure flows through an internal orifice and exhausts to atmosphere. This results in an output pressure of approximately atmospheric pressure. When the whisker is actuated, the exhaust to atmosphere is closed and the output increases in pressure dependent on degree of actuation and the supply pressure. As soon as the whisker is released, the output is again vented to atmosphere. NOTE: The whisker can be trimmed or bent to fit special applications. It is suggested that the sensor be located so that contact is made at about the outer one-third to one-half of the whisker.

DISCONTINUED

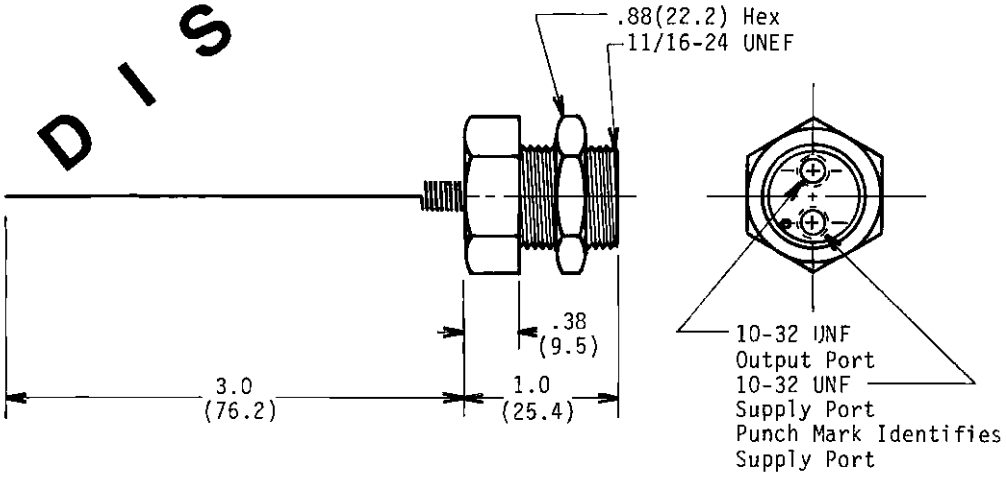

MODEL 2204-1 Touch Sensor

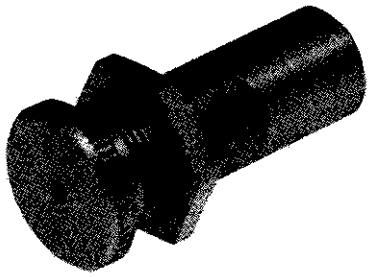

2204-1

DESCRIPTION
Model 2204-1 Touch Sensor is a back-pressure sensing device which provides an output signal any time that it's exhaust flow is restricted. The Touch Sensor may be actuated by the touch of a finger and is used with the LUK Series of Amplifier Valves. See TYPICAL SENSOR APPLICATIONS page 13 for recommended circuit.

SPECIFICATIONS
The Touch Sensor 2204-1 can be mounted through a ½ inch diameter hole in a panel or bracket that is no thicker than ¼ inch. NOTE: The output port is located on the side of the sensor, requiring the sensor to be mounted prior to making the tube connection.

OPERATING CHARACTERISTICS
3 to 10 psig (.2 to .7 bar) Maximum Range Supply Pressure.
.03 SCFM air consumption at 10 psig.

OPERATION
With no restriction at the touch port, the supply pressure flows through an internal orifice and exhausts to the atmosphere through the touch port. This results in an output pressure of approximately atmospheric pressure. When the port is restricted, the exhaust to atmosphere is restricted and the output increases in pressure dependent on the degree of restriction and the supply pressure. As soon as the restriction to the touch port is removed, the output is vented to the atmosphere.

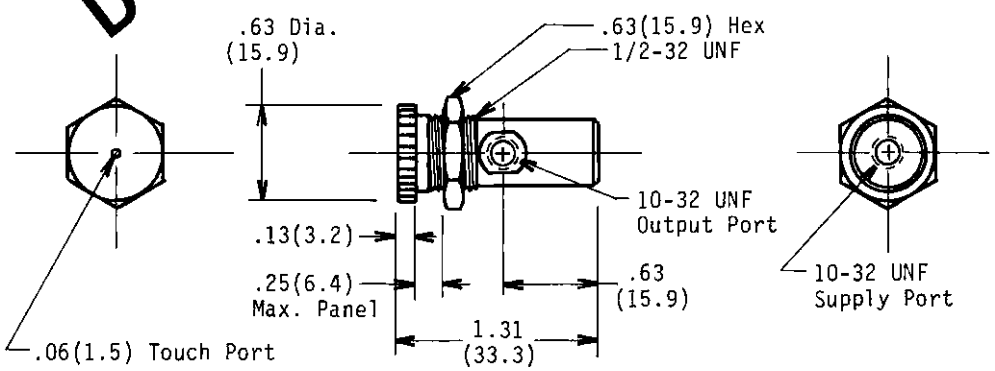

MODEL 2202-1 Angle Bracket

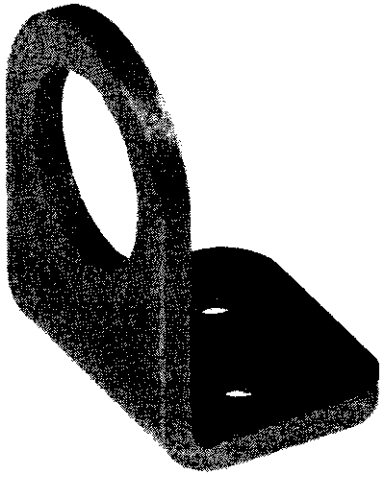

2202-1

DESCRIPTION
Model 2202-1 Angle Bracket is used to facilitate application and installation of jet sensing hardware. This bracket is designed for use with Models 1051-3, 2200-1, 2201-1 and 2203-1 to assure they are parellel to the mounting surface and their center lines are equal distance from the mounting service.

SPECIFICATIONS
Two mounting holes for No. 10 screws. 1.0 (25.4) center line to mounting surface.

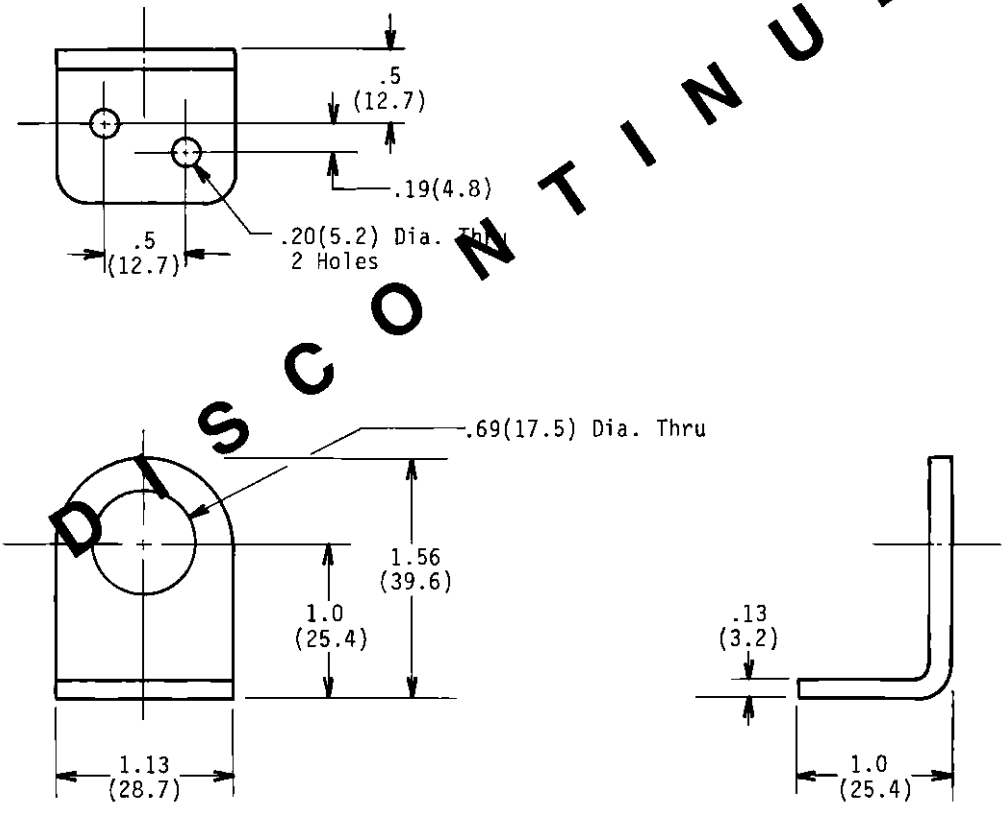

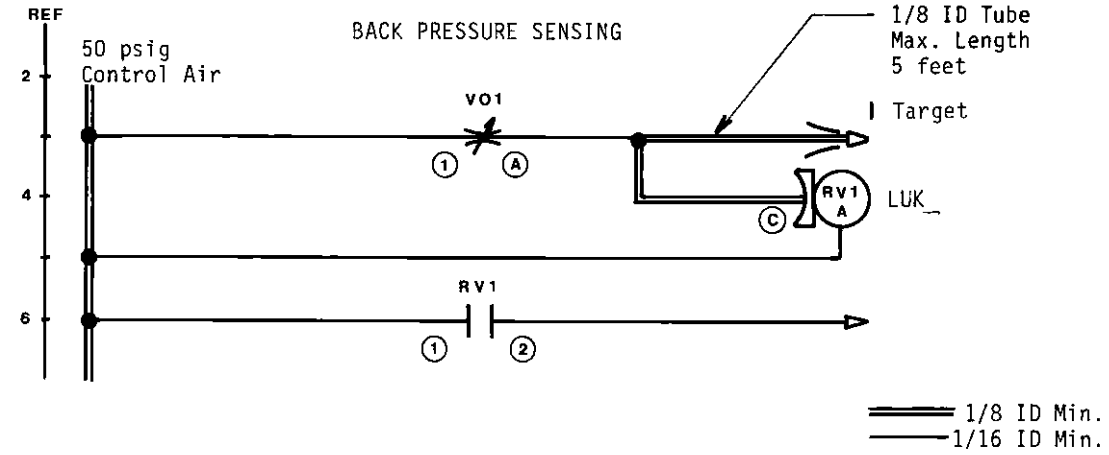
BACK PRESSURE SENSING
REF
2
4
6
50 psig
Control Air
VO1
1
A
1/8 ID Tube
Max. Length
5 feet
Target
RV1
A
C
LUK_
RV1
1
2
1/8 ID Min.
1/16 ID Min.

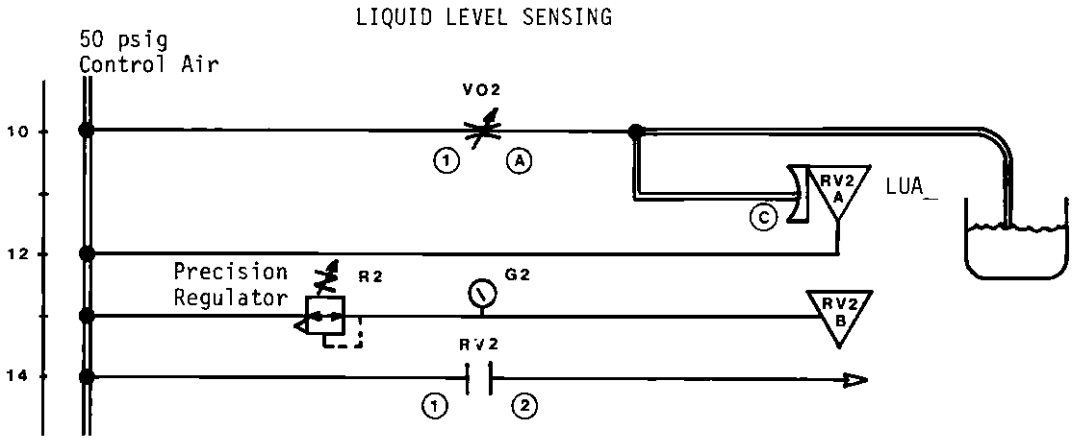
LIQUID LEVEL SENSING
50 psig
Control Air
10
12
14
VO2
1
A
RV2
A
C
LUA_
Precision
Regulator
R2
G2
RV2
B
RV2
1
2

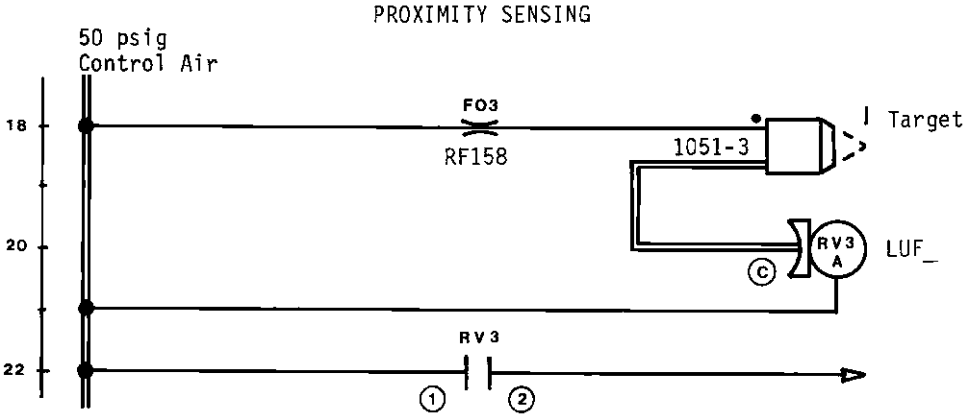
PROXIMITY SENSING
50 psig
Control Air
18
20
22
FO3
RF158
1051-3
Target
RV3
A
C
LUF_
RV3
1
2

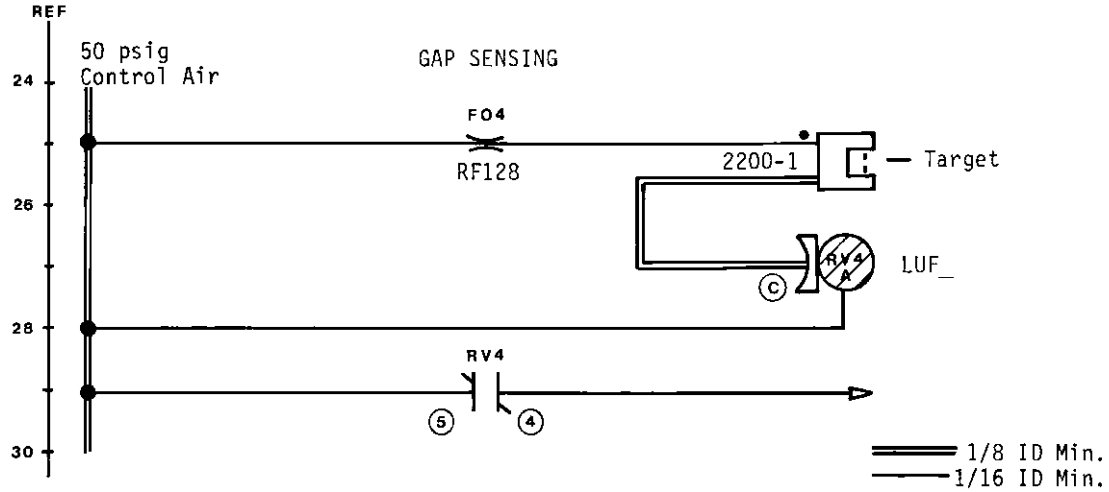
REF
50 psig
Control Air
GAP SENSING
24
26
28
30
FO4
RF128
2200-1
Target
RV4
A
LUF_
C
RV4
5
4
1/8 ID Min.
1/16 ID Min.

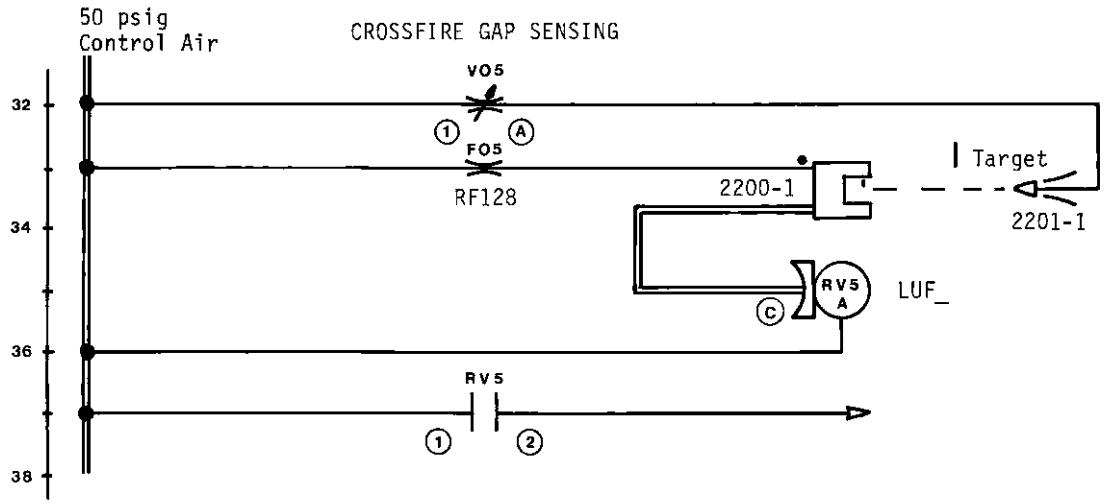
50 psig
Control Air
CROSSFIRE GAP SENSING
32
34
36
38
VO5
1
A
FO5
RF128
2200-1
Target
2201-1
RV5
A
LUF_
C
RV5
1
2

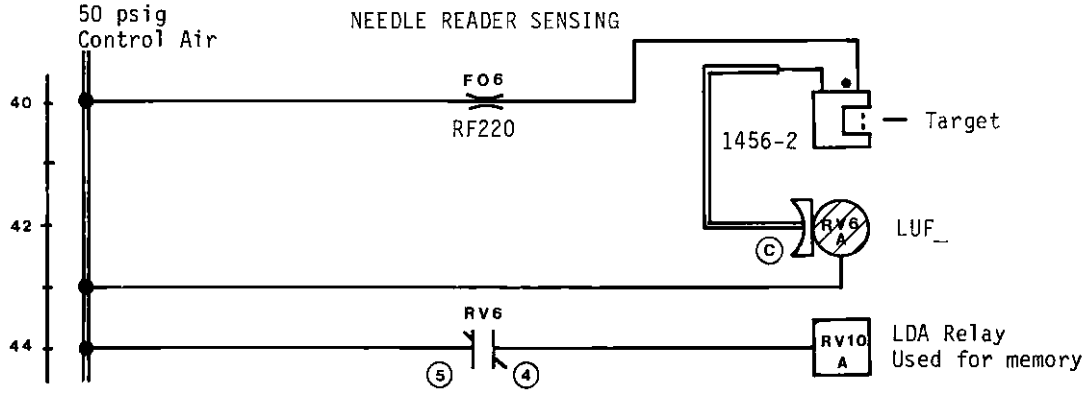
50 psig
Control Air
NEEDLE READER SENSING
40
42
44
FO6
RF220
1456-2
Target
RV6
A
LUF_
C
RV6
5
4
RV10
A
LDA Relay
Used for memory

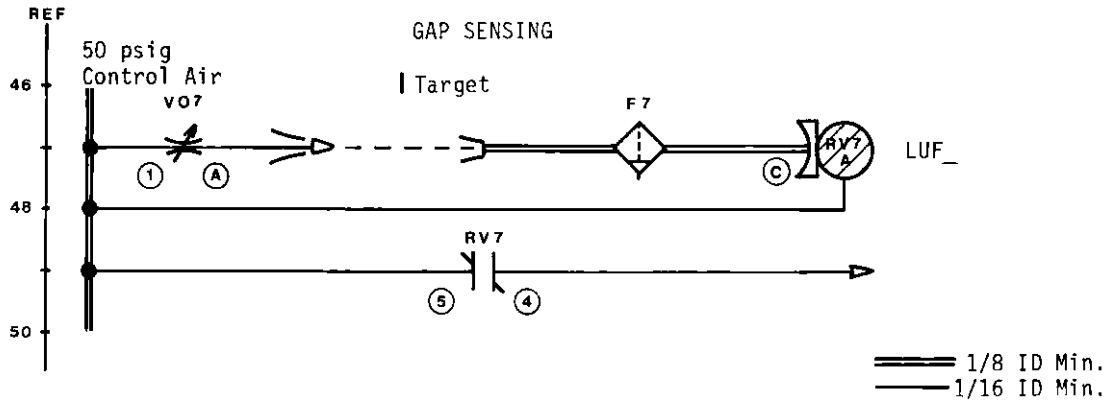
REF
GAP SENSING
50 psig
Control Air
Target
VO7
F7
RV7
A
LUF_
RV7
46
48
50
1/8 ID Min.
1/16 ID Min.

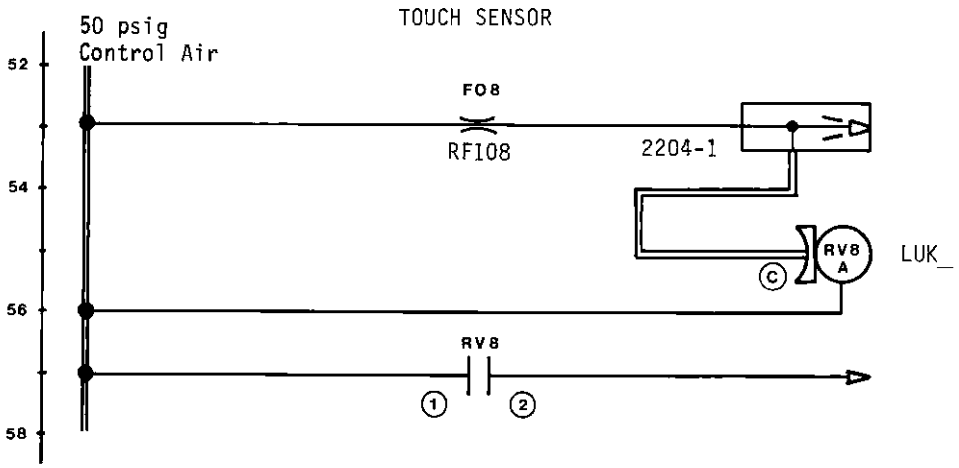
TOUCH SENSOR
50 psig
Control Air
FO8
RFI08
2204-1
RV8
A
LUK_
RV8
52
54
56
58

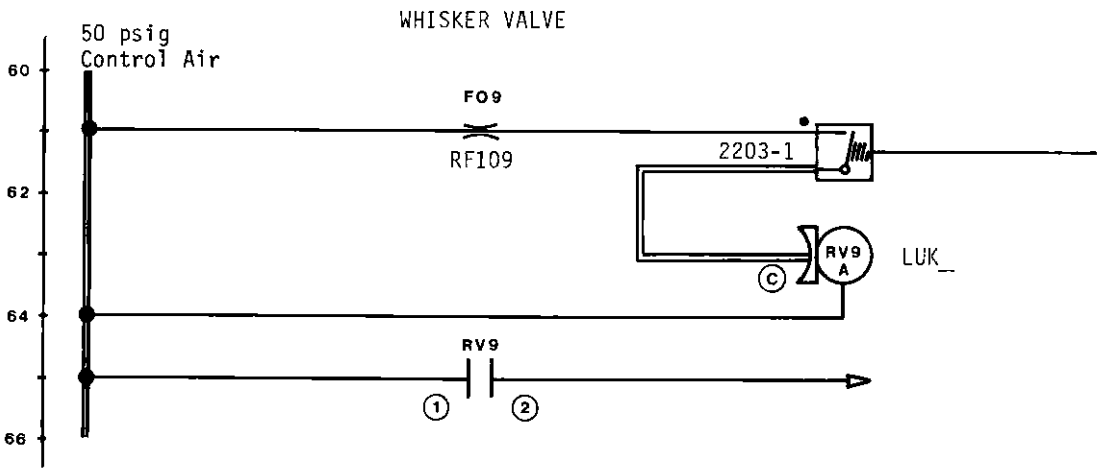
WHISKER VALVE
50 psig
Control Air
FO9
RF109
2203-1
RV9
A
LUK_
RV9
60
62
64
66

V2BR

MODEL V2_ _ Visual Indicators

	Not Actuated	Actuated
V2BA	Black	Amber
V2BG	Black	Green
V2BR	Black	Red
V2GR	Green	Red
V2RG	Red	Green

DESCRIPTION
The V2_ _ indicators are pressure actuated visual indicators designed to indicate the presence or absence of a pneumatic pressure signal.

SPECIFICATIONS
Panel mounted indicator fits standard pushbutton hole opening 1.20 inches diameter (30.5 mm). Maximum panel thickness .30 inches (7.6 mm).

OPERATING PRESSURE
50 psig (3.5 bar) Optimum Pressure
30 to 100 psig (2 to 7 bar) Maximum Range
2 psig (.1 bar) Release Pressure

SYMBOL

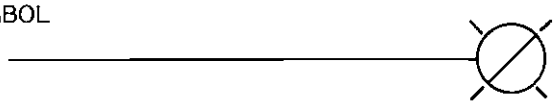

TEMPERATURE RANGE
+35 to +150°F (+2 to +65°C) Maximum Range

OPERATION
A pressure signal to the indicator causes a piston rod to extend rotating the ball to display a different color in the actuated position. When the pressure signal is removed, the spring returned piston rod rotates the ball back to its original position.

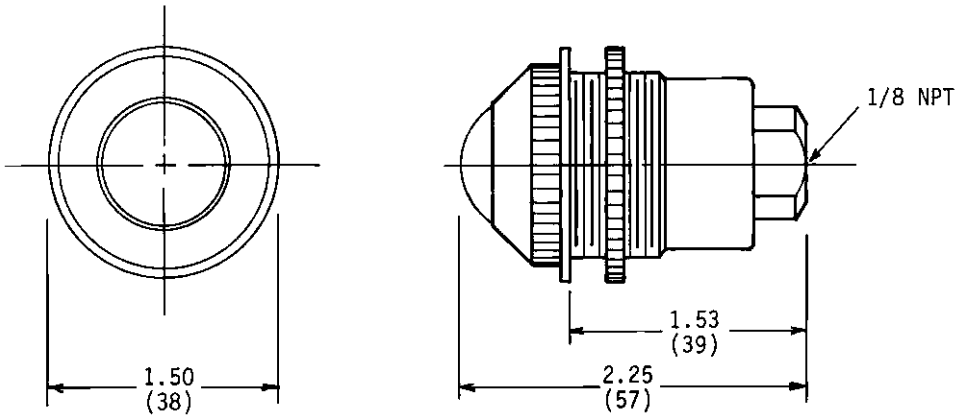

MODEL 1452-2 Audible Alarm

DESCRIPTION
The 1452-2 Audible Alarm is designed to indicate the presence of a pneumatic pressure signal by emitting an audible tone of approximately 1000 Hz at 50 psig. The Audible Alarm produces a penetrating sound to acoustically call attention to a cycle completion, a part in position, a malfunction or any other condition that might escape visual recognition.

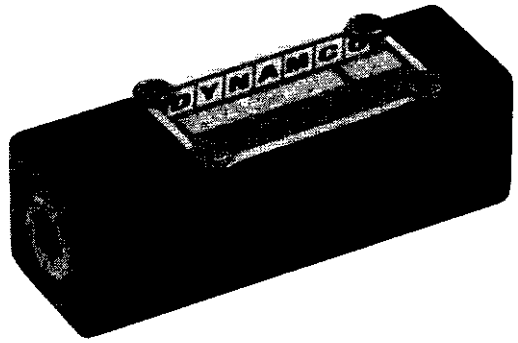

1452-2

SPECIFICATIONS
The Audible Alarm may be line-mounted by removing the 1/8" pipe plug and connecting it directly to a pipe line. The Audible Alarm may also be mounted against a flat surface using the mounting hole for support with the pressure signal connection made either through the 1/8" pipe port or the 10-32 port located on the back surface of the alarm. The port that is not connected to the pressure signal must be plugged. Plugs 468-2 and 506-5 furnished.

OPERATING PRESSURE
50 psig (3.5 bar) Optimum Pressure
30 to 100 psig (2 to 7 bar) Maximum Range

SYMBOL

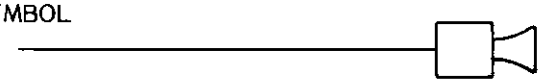

OPERATION
A pressure signal to either the 1/8" pipe port or the 10-32 port causes a reed within the audible alarm to vibrate producing a clear audible tone as long as the pressure signal is present. The volume of the alarm can be amplified by increasing the pressure (or increasing the flow) to the supply. The volume can be reduced by placing a restriction in the supply or reducing the pressure.

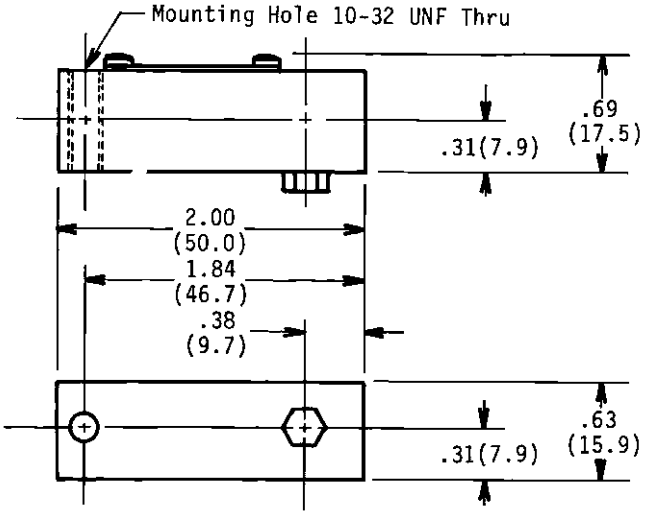

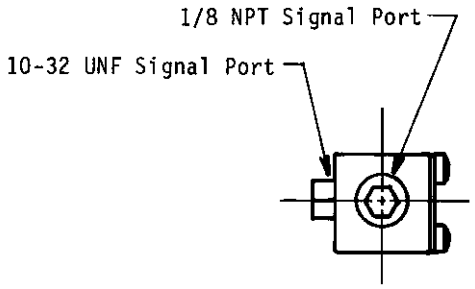

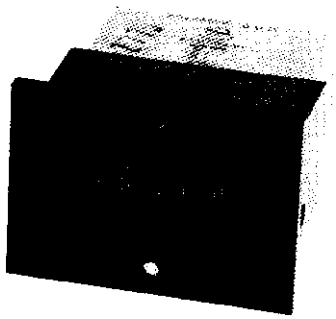

1383-1

MODEL 1383-1 Totalizing Counter

OPERATION
Totalizing counters provide a numerical readout of the total number of pneumatic count signals received. The counter advances one half figure when the count signal is pressurized and then advances the remaining half when the count signal is exhausted. Each pneumatic pulse increases the numeric indication by one. Counter can be reset to zero by either manually depressing the reset button or by a pneumatic signal to the reset port.

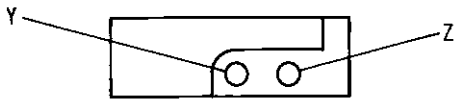

PORT IDENTIFICATION
Z - Count Signal Input
Y - Reset Port

SPECIFICATIONS

Number of Digits	6
Height of Digits	.16 (4 mm)
Reset	Manual and Pneumatic
Panel Mount Cover (black)	1.97 x 2.36 (50 x 60mm)
Panel Cutout	1.06 x 2.05 (27 x 52mm)
Mounting Depth	2.7(69mm) plus fittings
Operating Pressure	50psig(3.5 bar)Optimum
Pressure Range, Maximum	30 to 100psig(2 to 7 bar)
Count Signal Release Pressure	<2 psig (.1 bar)
Count Speed	25 per second (pulse ratio 1:1)
Reset Signal Duration	>150 ms
Ports	10-32 UNF

SYMBOL

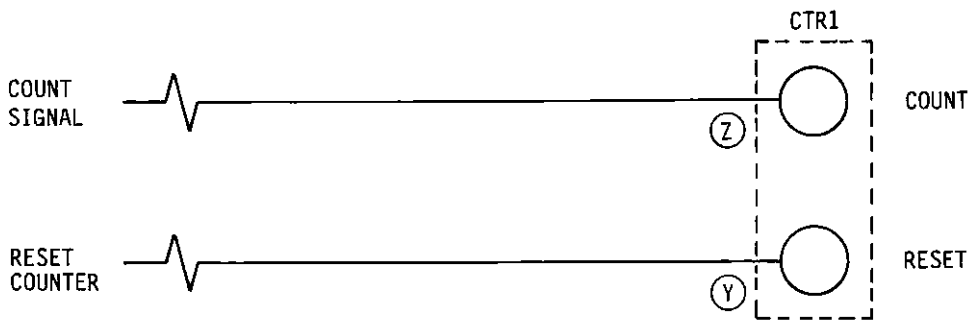

CTR1 = Counter 1383-1

MODEL 1384-1 Predetermining Counters

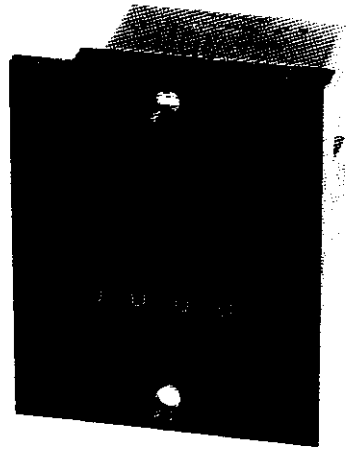

1384-1

OPERATION

Preset counter by depressing and holding the reset button while actuating the preselect buttons located above each digit until the desired number is reached. Release the reset button which presets the counter. The number selected will be retained until a new number is preset into the counter. Each pneumatic count signal subtracts from the preset number (one half pressurized, one half exhausted) until the counter reaches zero. When the last count exhausts, the counter provides a pneumatic output signal indicating that the preset count has been completed. To assure consistent results the counter is combined with a detented relay, LDA4, as shown in the symbol. Order relay as a seperate item. This circuit resets the counter to the preset number as soon as the count is completed and prevents additional count signals from being accepted until the resume count signal is received.

SPECIFICATIONS

Number of Digits	4
Height of Digits	.16 (4 mm)
Reset	Manual and Pneumatic
Panel Mount Cover (black)	2.36 x 2.95(60 x 75mm)
Panel Cutout	2.05 x 2.05(52 x 52mm)
Mounting Depth	2.7(69mm) plus fittings
Operating Pressure	50psig(3.5 bar)Optimum
Pressure Range, Maximum	30 to 100psig(2 to 7 bar)
Count Signal Release Pressure	<2 psig (.1 bar)
Count Speed	20 per second(pulse ratio 1:1)
Reset Signal Duration	>150 ms
Ports	10-32 UNF

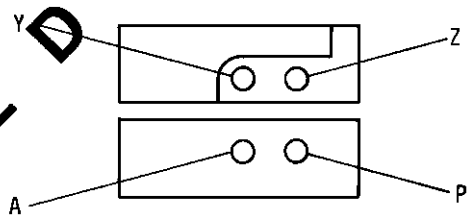

PORT IDENTIFICATION
Z - Count Signal Input
Y - Reset Port
P - Air Supply
A - Output Port

DISCONTINUED

RECOMMENDED CIRCUIT

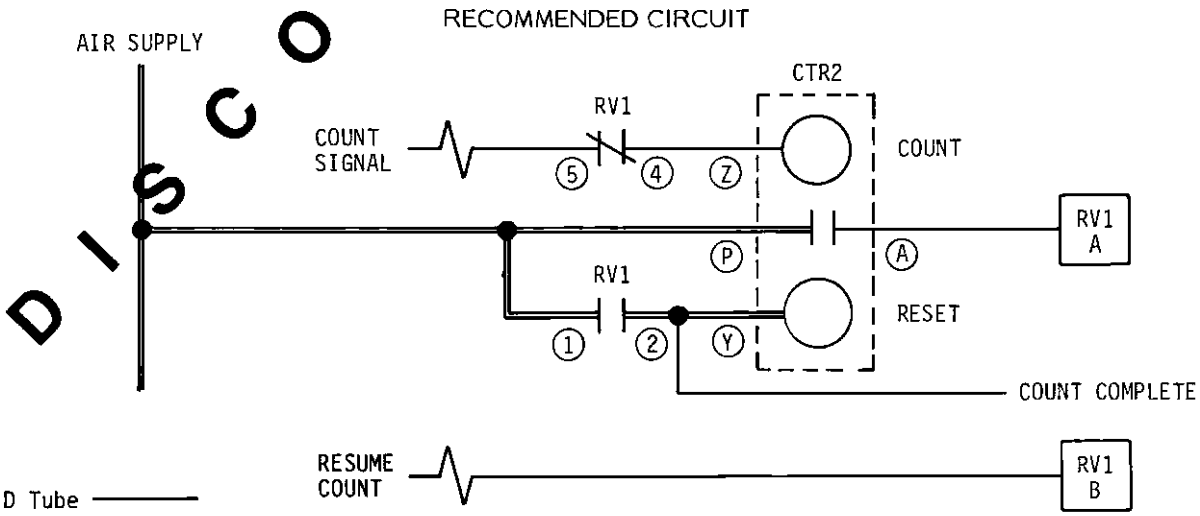

1/16 ID Tube ———
1/8 ID Tube ═══
CTR2 = Counter 1384-1
RV1 = Relay LDA4 (Order as seperate item)

INTRODUCING

PROGRAM-AIR™

THREE EVENT

SEQUENCE CONTROL SYSTEM

FROM

DYNAMCO

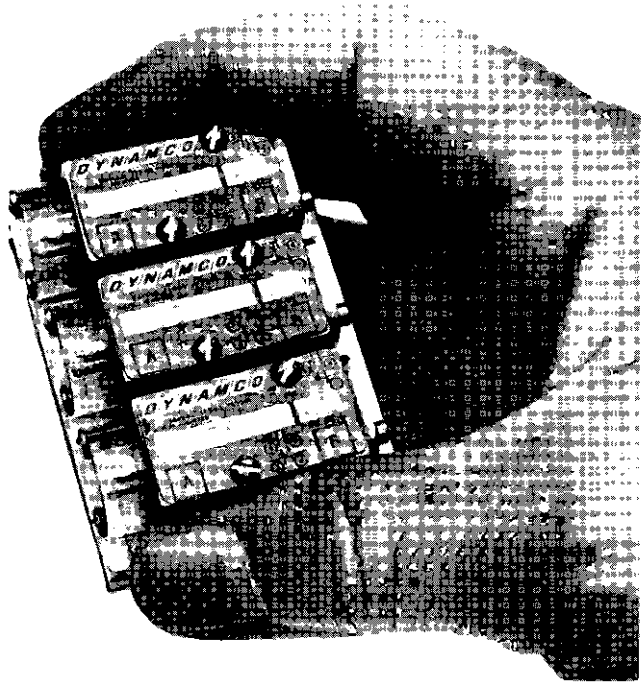

PROGRAM-AIR™ , patent pending, is DYNAMCO's new modular pneumatic building block control system. A building block system that provides three pneumatic output signals in a definite sequence. A concept that simplifies circuit design, minimizes installation time and provides continuous sequence verification for instant trouble shooting.

PROGRAM-AIR™ consists of three precision DYNAMCO double pilot, detented relays Model LDAO mounted to an integrated circuit base assembly. The integrated circuit base is a sandwich of aluminum plates fastened together into a permanent assembly. The top plate provides mounting surface for the LDAO relays and communicates the ports of these relays into the baseplate. The back plate is the connector plate with barbed tube fittings for convenient connection to the power devices and interlocks of the machine being controlled.

Between the top plate and the back plate, a series of air passageways are provided to interconnect the relays in such a way as to assure the definite output sequence of the assembly. This integrated base assembly provides the equivalent of eighteen tubes, seventeen barbed fittings, eight tees and three shuttle valves, all between the top plate and the back plate. An obvious savings in installation time and in hardware but of most importance, the interconnection between the relays will remain the same year after year assuring the same sequential performance.

Since PROGRAM-AIR™ provides a definite sequence of output signals, the circuit designer, installer and maintenance personnel do not have to consider each relay as having two control points and several flow paths but can consider the module as a device that provides three output signals that always occur in the following order:

1. A momentary pressure signal at the "Activates Event 1" port starts the module. The module then provides a maintained pressure output signal at its "Event 1" port.

2. Event 1 is complete when its interlock path has been completed. Completion of this interlock path causes the module to provide a maintained pressure output signal at its "Event 2" port and to exhaust the signal at its "Event 1" port.

3. Completion of Event 2 causes the module to provide a maintained pressure signal at its "Event 3" port and to exhaust the signal at its "Event 2" port.

4. Completion of Event 3 is then communicated to the "Activates Event 1" port of the next module. And so on.

Each event in turn provides a continuous pressure signal which is connected to a pilot port of a power valve causing the power valve to shift which results in action such as a cylinder moving or a motor rotating. An event port might be connected to the pilot of a pneumatic or a hydraulic valve, a pressure switch or any other power device or relay that can be piloted by air. Normally the interlocks are limit valves, time delays, proximity sensors or other devices or combination of devices that will allow air pressure to pass when the device verifies that the event did occur and has been completed.

PROGRAM-AIR™ FEATURES

1. INTERCHANGEABILITY
Standard LDAO relays may be changed without interrupting circuit connections. PROGRAM-AIR™ fits standard DYNAMCO mounting pattern covering three spaces. PROGRAM-AIR™ is provided with barbed connectors for easy installation using DYNAMCO 1/16 ID x 1/8 OD polyurethane tubing.

2. ABSOLUTE SEQUENCE
PROGRAM-AIR™ when used as designed, is totally interlocked providing an absolute sequence, year after year. If the circuit should ever fail it fails by simply interrupting the sequence. Even if a relay fails, the circuit sequence stops and will not continue until corrected. Each relay must shift to its "A" position to activate its event and must return to its "B" position before the next event will activate.

3. CONTINUOUS SEQUENCE VERIFICATION
The spool indicators on the LDAO relays provide a continuous verification of the active event. All indicators are visible except the one relay causing the active event. If some component of the machine fails such as a limit valve, power valve, special sensor or other device, the machine sequence will stop, and a quick scan of the PROGRAM-AIR™ relays will show only one indicator missing. This locates the active event and indicates where the sequence stopped. This pinpoints the problem to either the power device not responding to the event's signal or the interlock that has not been completed.

4. SHORT CIRCUIT CAPABILITY
PROGRAM-AIR™ is designed to allow one or more events to be shorted out. If an event is not needed, it can be eliminated by plugging the event's output port and then connecting that event's interlock supply port directly to the port which activates the next event.

5. TIME DELAY
PROGRAM-AIR™ uses standard detented relays (LDAO) which also can be used as time delay relays. The addition of a flow control and volume chamber between the interlock supply port and its end event port is all that is necessary to accomplish a time delay. The PROGRAM-AIR™ relay functions both as a sequence relay and a time delay relay. The time delay relay once actuated remains actuated until reset by the next event.

6. ABILITY TO TURN OFF
PROGRAM-AIR™ can be connected to turn itself off by connecting port "P" to port "Q". Once the module is started, it will execute its programmed sequence and then turn itself off when the interlock for Event 3 indicates that Event 3 is completed. The module can then be restarted by a momentary signal at port "O" which reactivates Event 1.

7. PRESETTABLE TO ANY CONDITION
PROGRAM-AIR™ can be preset or reset to any condition. Both control ports of all three relays are accessible for simple straight forward easy connection that allows the relays to be set in either the "A" or the "B" position.

8. COMPLEX CIRCUITRY
In addition to straight forward sequential circuitry, PROGRAM-AIR™ may also be used to solve series-parallel circuit requirements where the completion of an event may start multiple modules simultaneously. Each of these modules may then function independently until all are completed. When completed and properly checked, the sequence can then be terminated or continued. Modules may fan-out and be combined as required to solve the circuit's requirements.

9. EASE OF CIRCUIT DESIGN
PROGRAM-AIR™ is predesigned to incorporate good design practices with a totally interlocked absolute sequence. Since this characteristic is built into every PROGRAM-AIR™ unit the designer uses PROGRAM-AIR™ as a building block to construct the circuit rather than redevelop the circuit from individual relays and flow paths normally associated with circuit design.

TABLE OF CONTENTS

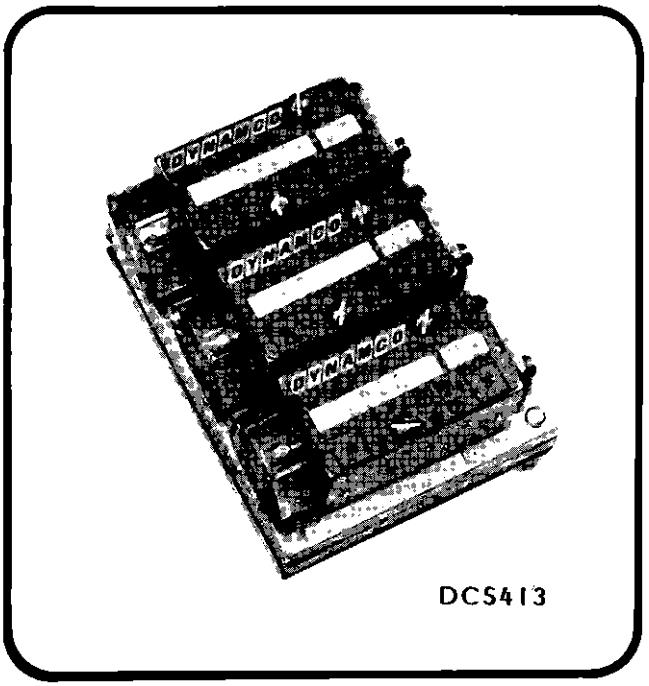

DCS413

PROGRAM-AIR™, patent pending, combines precision air control devices to accomplish multifunction logic relationships within a single unit. One PROGRAM-AIR™ unit contains all of the hardware necessary to provide a three output, sequence circuit. The circuit designer has the freedom of using a multifunction control device with the knowledge that the result will be an absolute, totally interlocked sequence circuit.

MODEL DCS413 PROGRAM-AIR™

SPECIFICATIONS

Model DCS413 PROGRAM-AIR™ consists of three precision DYNAMCO Air Relays, Model LDAO, factory interconnected and tested to assure absolute sequential output signals. Furnished back ported 1/16 barbed tube connections with two #6 mounting screws.

OPERATING PRESSURE

50 psig (3.5 bar) Optimum Pressure
30 to 100 psig (2 to 7 bar) Maximum Range

RESET PRESSURE

Same as Operating Pressure
0.25 second minimum duration

AIR SUPPLY

Must be filtered, dry, non-lubricated and regulated
See Bulletin 600 for details

TEMPERATURE RANGE

+32 to +200°F (0 to +93°C) Maximum Range
Caution - At low temperatures, the dew point of the air supply must be lower than the operating temperature to prevent icing. At high temperatures, DYNAMCO polyurethane tubing is limited to 130°F at 50 psig.

RESPONSE TIME

3 milliseconds at 50 psig

MOUNTING PATTERN

PROGRAM-AIR™ fits standard DYNAMCO relay mounting pattern. Covers three spaces.

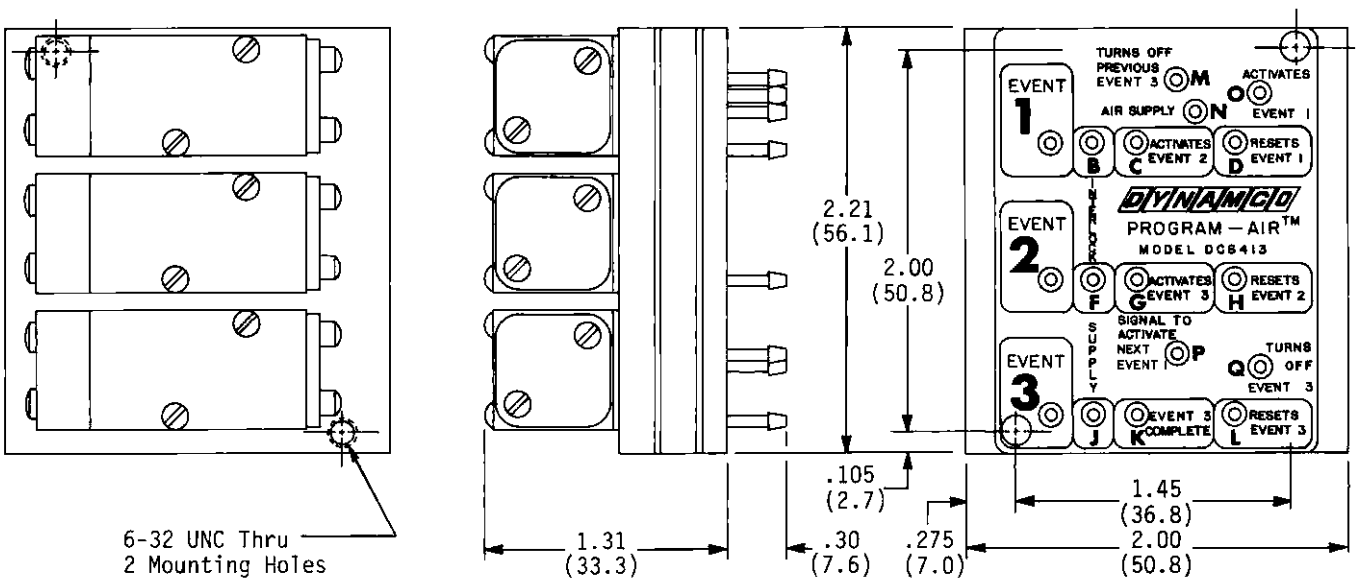

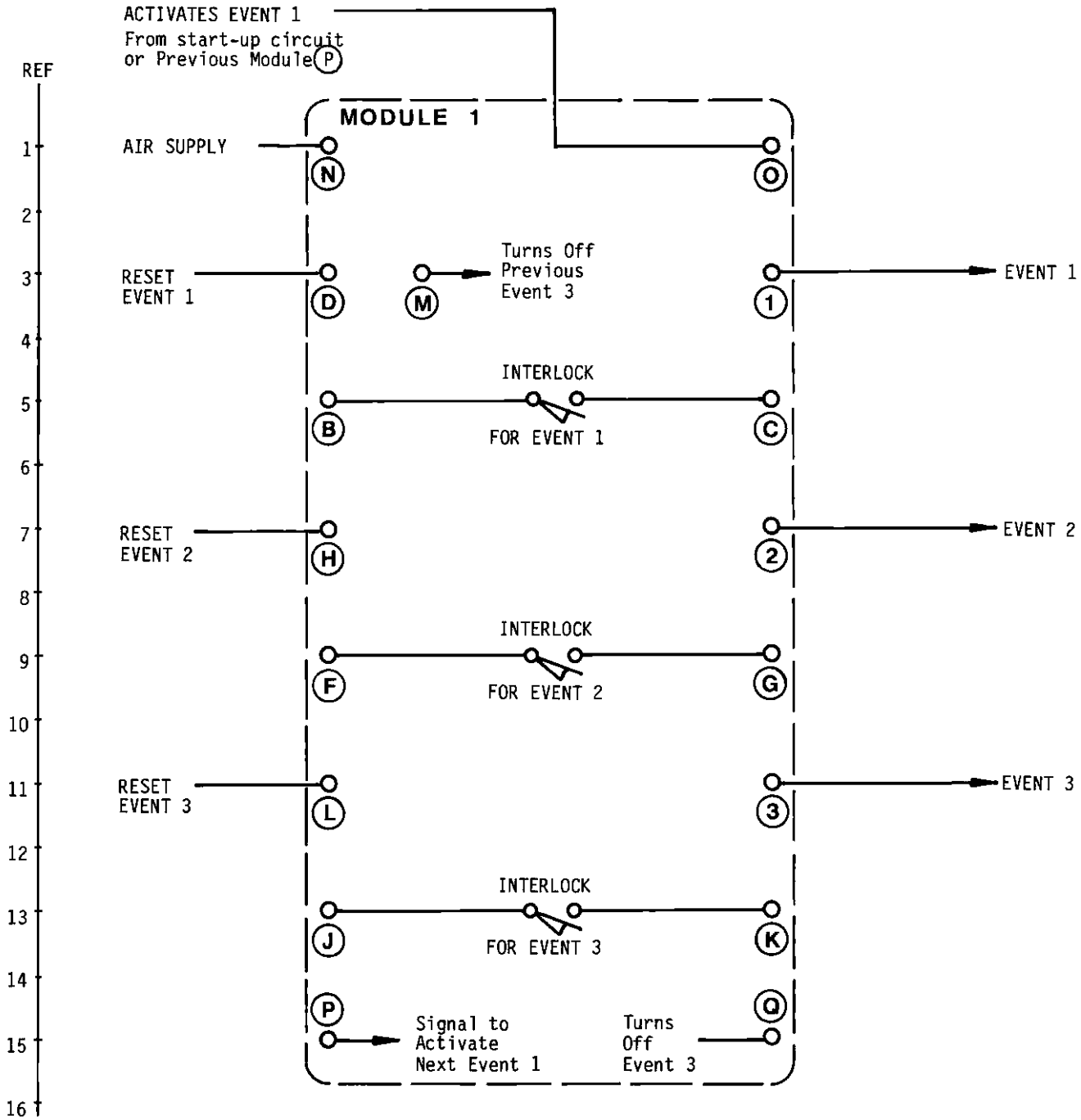

SYMBOL FOR DIAGRAMMING
PROGRAM-AIR™

The symbol above is to be used on control diagrams to show each PROGRAM-AIR™ unit. The symbol identifies each of the module's external ports and reads from top to bottom and left to right. The outputs (Events 1, 2 and 3) are shown connected to their respective power valve pilot ports, and the interlocks are shown connected between the left and right columns of ports. The supply and resets as required, are shown connected to their source. Identify MODULE 1, MODULE 2, etc.

RELAY DIAGRAM

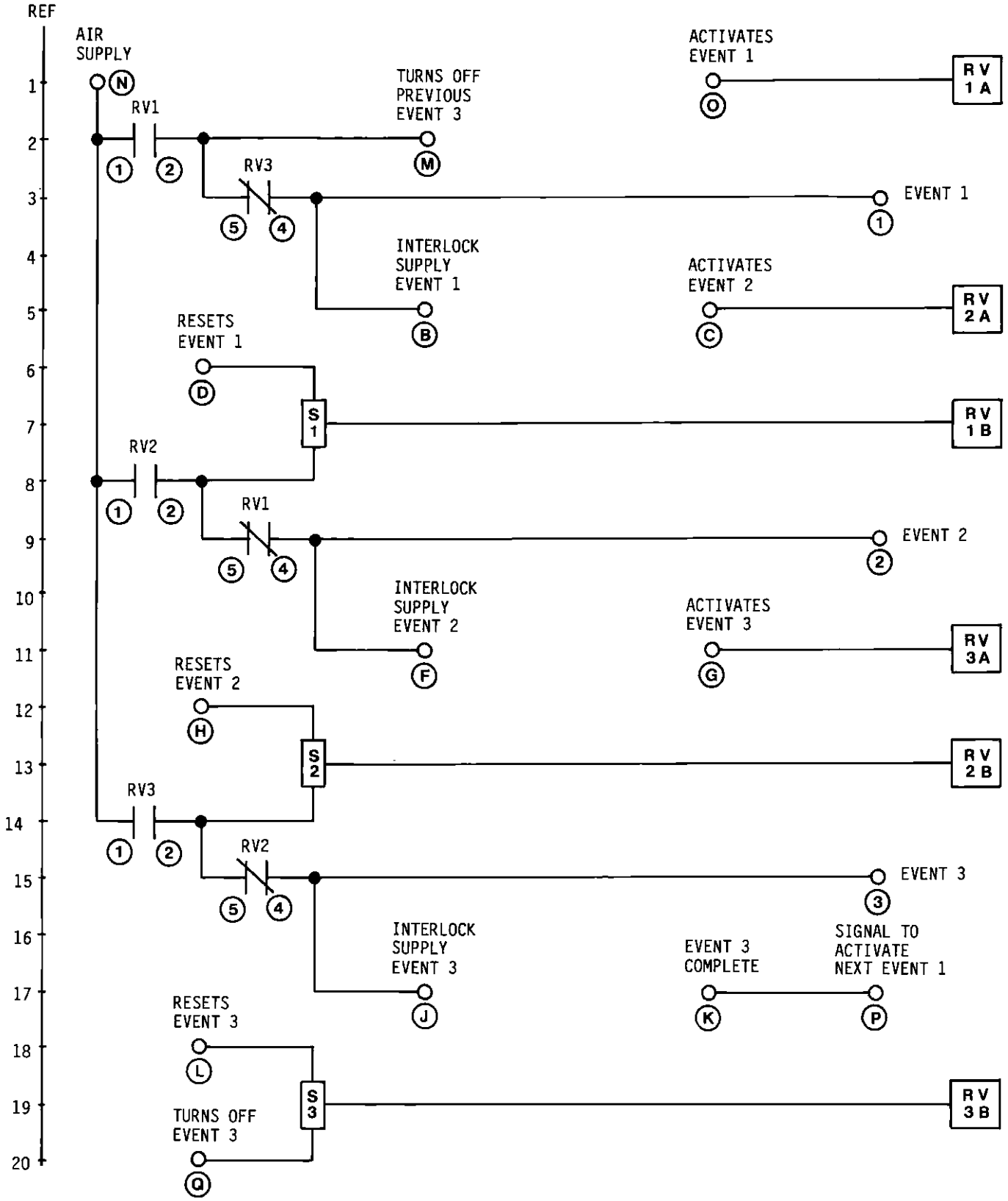

PROGRAM-AIR™ OPERATING PRINCIPLES

PROGRAM-AIR™ consists of three DYNAMCO relays mounted to a module containing three shuttle valves and the equivalent of eighteen lines, seventeen barb connections and eight tees. The interconnections between the relays and shuttle valves are shown in the diagram on page 6.

The PROGRAM-AIR™ unit operates as follows: when a 50 psig supply pressure is applied to port N (Ref. 1) of the PROGRAM-AIR™ unit there will be no output signal or pressure present from any of the other ports as long as all three relays have their spools in the "B" position (alternate flow paths RV1-Ref. 2, RV2-Ref. 8 and RV3-Ref. 14 are all non-passing as shown). A momentary start signal at port O (Ref. 1) pressurizes the A pilot of RV1 through the module, and since there is no signal present at RV1B (Ref. 7), RV1's spool shifts to the "A" position, making RV1's alternate flow path (Ref. 2) passing and its normal flow path (Ref. 9) non-passing. This provides a continuous pressure signal at port M and at port 5 of RV3 (Ref. 3). Signal M is used to turn off the previous Event 3. With RV3's normal flow path (Ref. 3) passing, a pressure signal is also present at ports 1 and B (Ref. 3 and 5).

The pressure signal at port 1 starts Event 1 by being connected to the pilot of the power device(s) that is to be actuated during Event 1. The signal at port B supplies the interlock(s) that is used to determine when Event 1 is completed. As soon as the interlock selected (limit valve, pushbutton valve, time delay or other) determines that Event 1 has been completed, the interlock provides the flow path for signal B to pass to port C (Ref. 5). The signal at port C now pressurizes the A pilot of RV2 causing its alternate flow path (Ref. 8) to become passing and its normal flow path (Ref. 15) to become non-passing. This provides a pressure to the B pilot of RV1 through S1 and to port 5 of RV1. Since the spool of RV1 was in the "A" position during Event 1, Event 2 cannot be started until RV1's spool returns to the "B" position. With a signal at RV1B (Ref. 7) and no signal at RV1A (Ref. 1), RV1 shifts to the "B" position making its alternate flow path (Ref. 2) non-passing thereby exhausting the pressure signal at ports M, B and 1 which terminates Event 1. The RV1 normal flow path (Ref. 9) becomes passing which presents a constant pressure signal at ports 2 and F (Ref. 9 and 11).

The signal at port 2 starts Event 2, and the signal at port F supplies the interlock(s) used to indicate the completion of Event 2. When the interlock is completed, it passes the signal at port F to port G which pressurizes the A pilot of RV3. The shifting of the spool to the "A" position in RV3 makes its normal flow path (Ref. 3) non-passing and the alternate flow path (Ref. 14) passing. This provides a pressure signal to the B pilot of RV2 through S2 and to port 5 of RV2. Since RV2 was in the "A" position during Event 2, Event 3 cannot be started until RV2 returns to the "B" position. With a signal at RV2B (Ref. 13) the spool shifts to the "B" position causing RV2's alternate flow path (Ref. 8) to become non-passing and its normal flow path (Ref. 15) to become passing. This provides a continuous pressure signal at port 3 to start Event 3 and at the J port to supply the interlock(s) for Event 3.

As soon as the interlock for Event 3 is completed, it passes the signal from port J to port K indicating that Event 3 is complete. Port K through the module provides output P which is connected to the O port of the next module. Reset ports D, H and L (Ref. 6, 12 and 18) are provided to allow the relays to be reset into the "B" position. Note: pressure at port N must be removed before the relays can be reset.

SEQUENTIAL CONTROL DESIGN USING PROGRAM-AIR™

PROGRAM-AIR™ establishes a sequence of events that become the heart of all sequential control circuits. PROGRAM-AIR™ however, does not eliminate the need for accurate specifications describing in detail what the circuit is to accomplish and a complete description of the devices to be controlled. There are many different ways to present this information. The most universally accepted method of describing what the circuit is to accomplish is to develop a written set of specifications including information concerning the initial conditions, the sequence of events, the emergency stop requirements, the manual controls required, the safeties and interlocks required and a diagram of the power devices to be controlled.

The power diagram should be drawn with each symbol showing the condition that exists when the machine is in the condition as specified by the statement of initial conditions with the power air and the control air on. The symbols used for the power diagram should be in accordance with ANSI Y32.10. Note: review the power valve types (detented, spring returned, spring centered, etc.) to make sure they will react properly if the control air supply is lost or to other emergency conditions. If they have not been selected to meet these requirements, reselect the type of power devices to be used before proceeding with the control design. An accurate specification and power diagram is an absolute requirement for all circuit design. It is always required whether the designer is using PROGRAM-AIR™, standard air relays or one of the many other types of control systems available today.

A BENDING FIXTURE

GENERAL
A simple bending fixture will be used to introduce the PROGRAM-AIR™ design concept. The fixture is common to many industries. It uses three power devices (in this case pneumatic cylinders) to position the part, then to clamp it and then to bend it to a desired configuration. The written specifications are as follows:

INITIAL CONDITIONS
1. Control and Power air on
2. Position Cyl Retracted
3. Clamp Cyl Retracted
4. Bend Cyl Retracted
5. Ready to start

SEQUENCE OF OPERATIONS
1. Operator momentarily actuates Cycle Start pushbutton PB1. Position Cylinder extends (releasing LV2).
2. When Position Cylinder has fully extended, it actuates LV1. Position Cylinder then retracts (releasing LV1).
3. When Position Cylinder has fully retracted it actuates LV2. Clamp Cylinder extends (releasing LV6).
4. When Clamp Cylinder has fully extended it actuates LV3. Bend Cylinder extends (releasing LV5).
5. When Bend Cylinder has fully extended it actuates LV4. Bend Cylinder retracts (releasing LV4).
6. When Bend Cylinder is fully retracted it actuates LV5 Clamp Cylinder retracts (releasing LV3).
7. When Clamp Cylinder is fully retracted it actuates LV6. Cycle is complete. Operator removes part. Fixture ready for new part.

EMERGENCY STOP None Required

OPERATOR CONTROLS
Cycle Start PB1 Black Flush Pushbutton

SAFETIES AND INTERLOCKS
None required except those listed in the Sequence of Operations.

POWER DIAGRAM

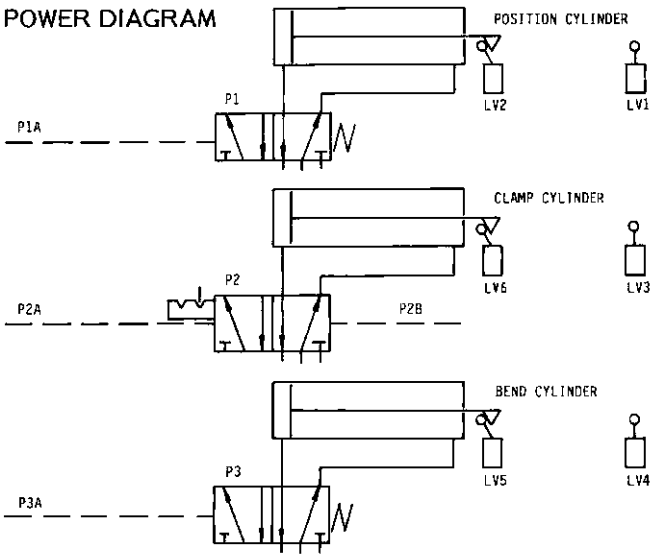

DESIGNING THE CIRCUIT

Two PROGRAM-AIR™ units, Model DCS413, are selected to satisfy the six actions of this Bend Fixture, and a symbol for each is drawn as shown on page 9 with Events 1, 2 and 3 of the first module providing actions 1, 2 and 3, and the second module's Events 1, 2 and 3 providing actions 4, 5 and 6. An air supply is shown connected to each module at port N (Ref. 1 and 17). Note: the air supply should be filtered, dry, non-lubricated and regulated to 50 psig. See DYNAMCO Bulletin 600 for complete details.

Next the interconnections between modules are made: port M of Module 1 (Ref. 3) to port Q of Module 2 (Ref. 31), port P of Module 1 (Ref. 15) to port O of Module 2 (Ref. 17), port P of Module 2 (Ref. 31) to the Cycle Start pushbutton (Ref. 2) and from its output to port O of Module 1 (Ref. 1). These interconnections with the possible exception of the Cycle Start button are required to interconnect the modules, and if more than two modules had been required, similar interconnections between the additional modules would have to be made.

Port 1 of Module 1 (Ref. 3) is shown connected to P1 (Power Valve #1 pilot). The round symbol P1 denotes the pilot port of a spring returned power valve. Since a signal at this port causes the position Cylinder to extend, this satisfies the first action requirement of the Operational Sequence.

Port 2 of Module 1 is shown blocked. Since P1 is a spring returned valve, as soon as 2 becomes pressurized, port 1 is exhausted allowing the Position Cylinder to retract which satisfies the second action requirement. Port 3 (Ref. 11) is connected to P2A to satisfy the third action requirement. The square symbol denotes one pilot of a detented double piloted power valve. Module 2's outputs are connected in a similar manner (1 is connected to P3, 2 is blocked and 3 is connected to P2B) to satisfy actions 4, 5 and 6 of the Operational Sequence.

When a signal is present at port 1 of Module 1 starting the first action, the interlock supply port B (Ref. 5) is also on. Since LV1 is the limit valve indicating that the first action has been completed, port B is connected to the input port 1 of LV1, and its output port 2 is connected to port C of Module 1 (Ref. 5). As soon as LV1 is actuated, indicating that the first action is complete, Event 1 ends and Event 2 starts. This removes the signals at 1 and B and provides signals at 2 and F (Ref. 7and 9).

Since LV2 was released when the Position Cylinder was extended, it will not allow the signal at port F to advance to port G until the Position Cylinder is fully retracted. When it is retracted, the signal at G advances the sequence to Event 3. In a like manner the interlocks for the remaining actions are shown connected between their supplies and their "Activates Next Event" or "Event Complete" ports.

For simplicity in this example limit valves are used for all interlocks. In many circuits it may be necessary to combine limit valves in series or to add time delays or other functions as required to satisfy the Operational Sequence. Note: all resets were eliminated from this example.

BENDING FIXTURE
CONTROL CIRCUIT DIAGRAM

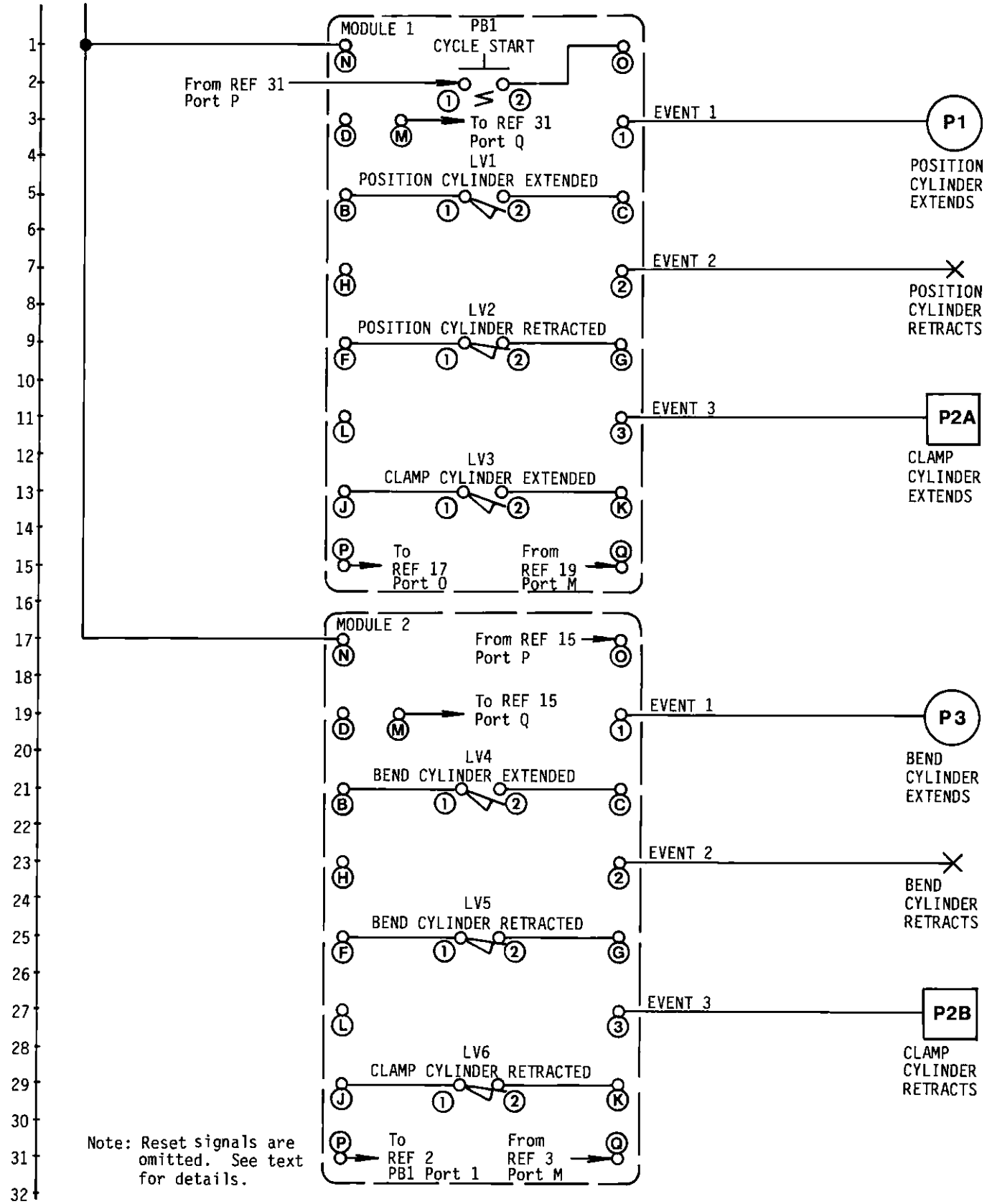

DEMONSTRATOR CIRCUIT

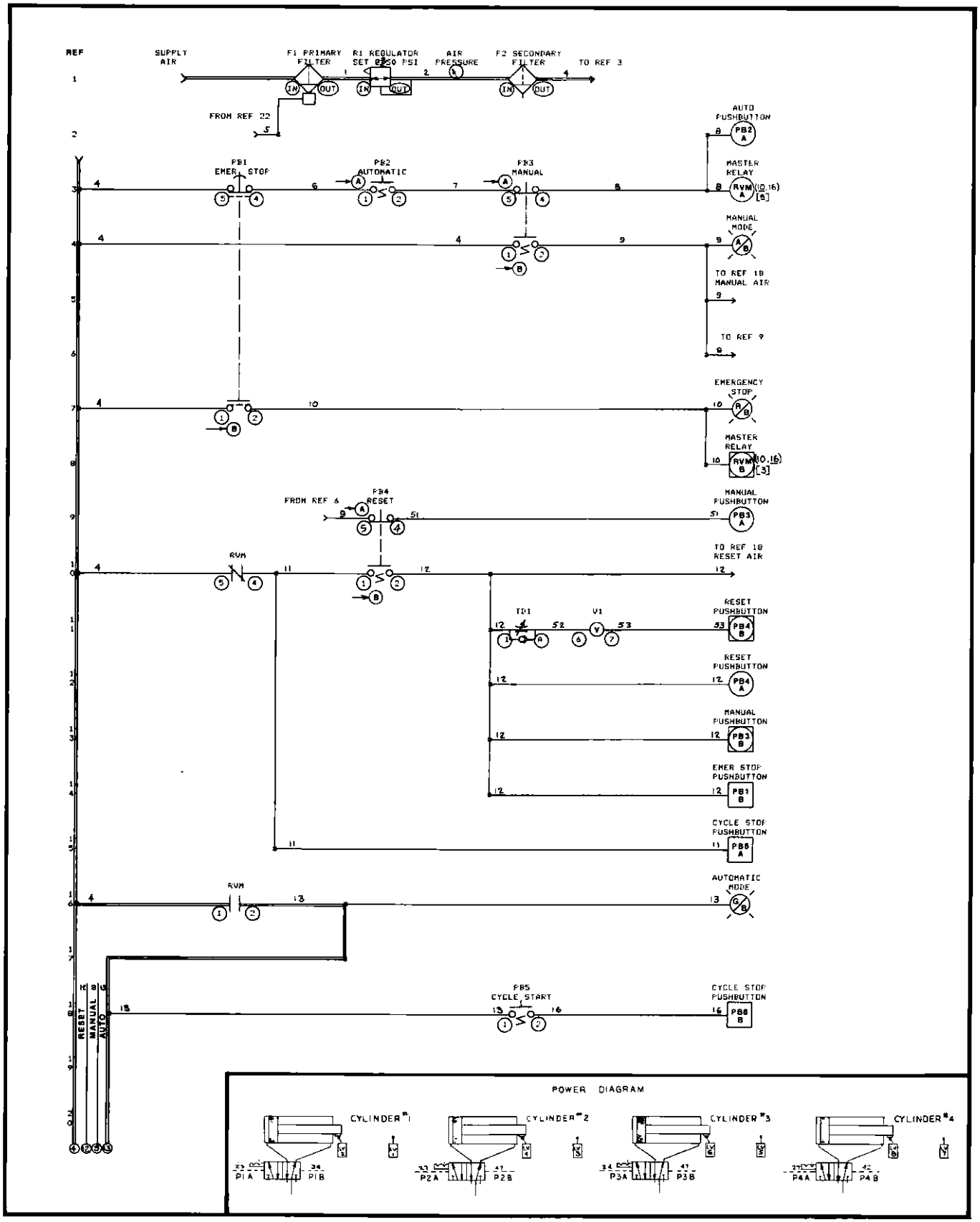

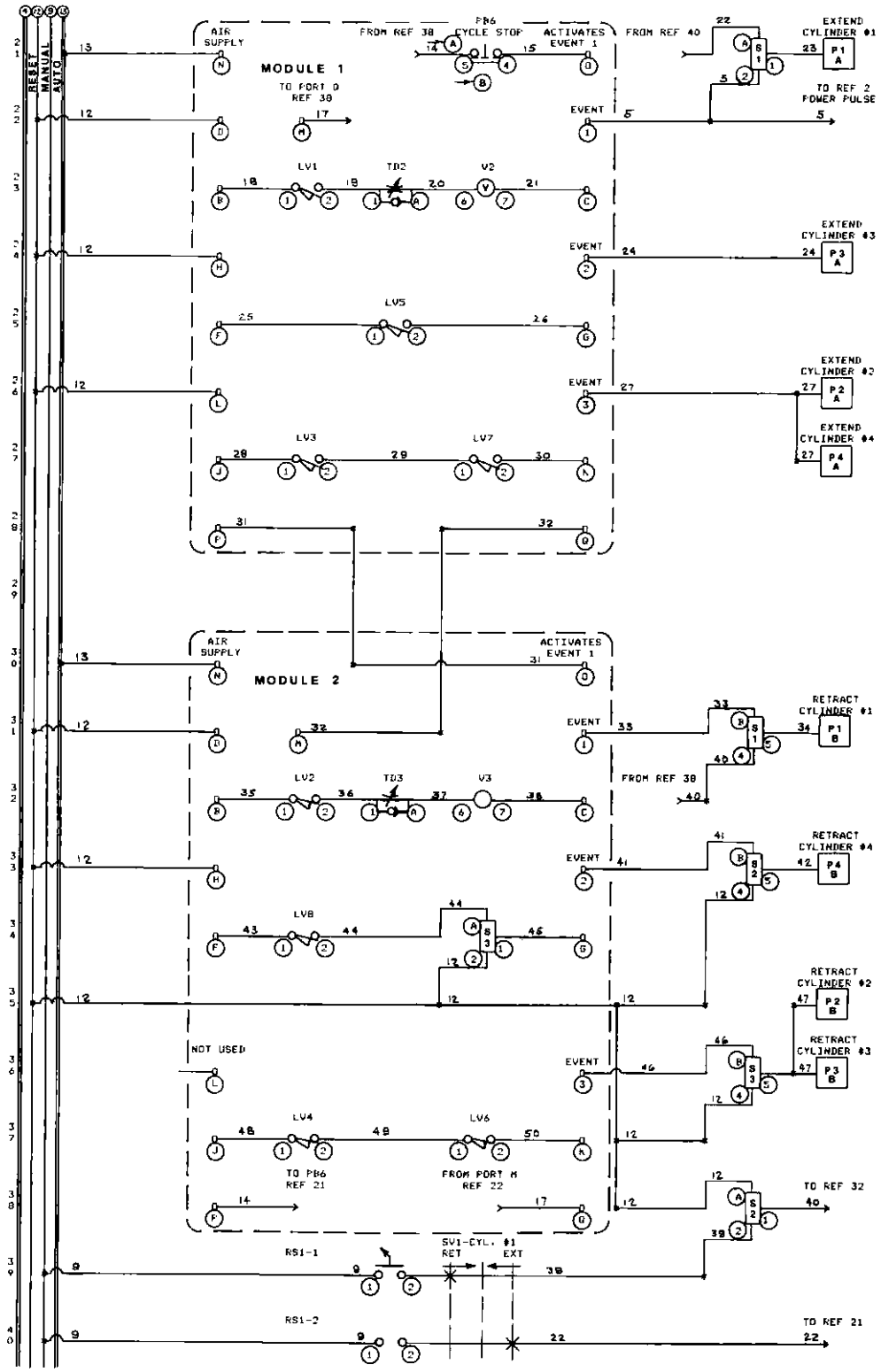

REL. NO.	CHANGE	DATE	BY
7		10/25/77	RLC
6		7/14/76	RLC
5		4/ 5/76	RLC
4		1/25/76	RLC
3		12/11/75	RLC
2		11/22/75	RLC
1		11/ 6/75	RLC

1/16 ID x 1/800 TUBE
1/8 ID x 1/400 TUBE
CROSSING JOINING

LAST INDICATORS		
TUBE		53
EV		-
S		3
MODULE		2

CUSTOMER

DYNAMCO DRAWN RLC 11/6/75
BY
APPD.
APPD.
DATE

DYNAMCO

TITLE
DEMONSTRATOR CIRCUIT

DRAWING NO.
10C5448

SHEET 1 OF 1

TWENTY REASONS FOR SELECTING DYNAMCO

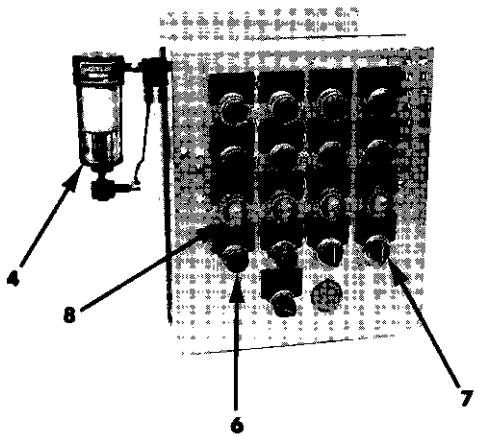

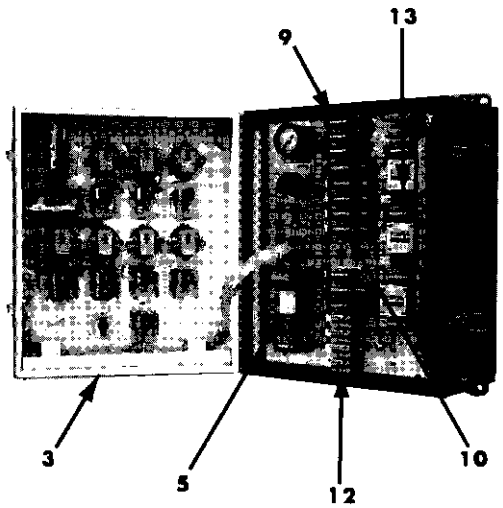

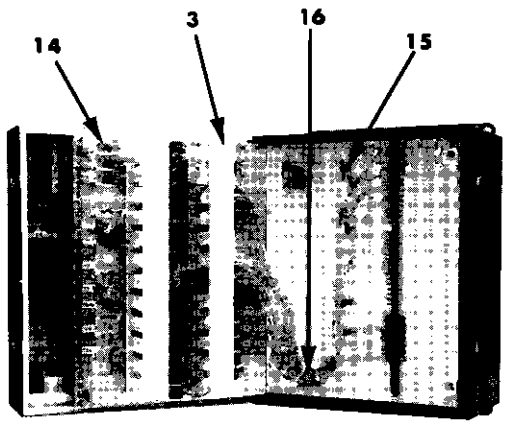

1 **MINIATURE SIZE** Small component sizes result in cigarette package size control systems. A carry-on suitcase can hold a very complex system.

2 **HIGH FLOW / NORMAL FLOW** New component design allows normal flow (1/16 barb) or new high flow (10-32).

3 **ENCLOSURE** Rugged industrial quality, deep door for pushbuttons. Provisions for primary filter, harness bundle to door, print pocket. White interior, tubing ducts, captive screws, terminal strips.

4 **PRIMARY FILTER** Coalescing with Power Pulse Drain.

5 **SECONDARY FILTER** Panel mounted, outside-to-in flow and white element provide indication of air quality.

6 **PUSH BUTTON VALVES** One or two spring return or detented valves. Pilot ports allow "sealing in."

7 **ROTARY SELECTORS** Two or three position, maintained or spring returned operators. Two valves can be mounted behind each operator. Wide choice of cam codes.

8 **VISUAL INDICATORS** Spring return to either color or detented. 180° visibility, fits standard hole.

9 **PROGRAM-AIR** *TM* Modular, programmable sequencing. Reset and preset capability, instant trouble shooting.

10 **4 WAY 5 PORT RELAYS** Spring return, detented ,free-floating, stainless lapped spool, yellow spool indicator.

11 **MULTI-FLOW-PATH RELAYS** Same construction as 4 way 5 port but has 3 multi-purpose flow paths.

12 **SHUTTLE VALVES** Dual shuttle fits in same space as relay. High flow design provides increased performance.

13 **TIME DELAYS** Panel mounted with reference marks.

14 **SUB BASE MOUNTING** Components sub base mounted for ease of maintenance. 1/16 barb or 10-32.

15 **MINIATURE FITTINGS** Tees, connectors, terminal strips, manifolds, etc. 1/16 barb or 10-32.

16 **POLYURETHANE TUBING** Push on reuseable tubing resists oil, water, sunlight, hydrolysis, ozone, etc.

17 **JET SENSING** Proximity, back pressure, sender/receiver. Spool indicator for easy jet adjustment.

18 **HEAVY DUTY LIMIT VALVES** 18 operator heads, oil tight, integral conduit connection, 4 way 5 port valve.

19 **MINIATURE LIMIT VALVES** Small size for installation where practically nothing else will fit.

20 **INTERFACES** Air to electric, electric to air, hydraulic to air, hydraulic to electric.